FOR REGISTRY OF DEEDS USE ONLY

"I CERTIFY THAT THIS PLAN CONFORMS THE RULES AND REGULATIONS OF THE REGISTERS OF DEEDS."

PREPARER

"SCONTICUT NECK WOODS"
DEFINITIVE SUBDIVISION PLAN

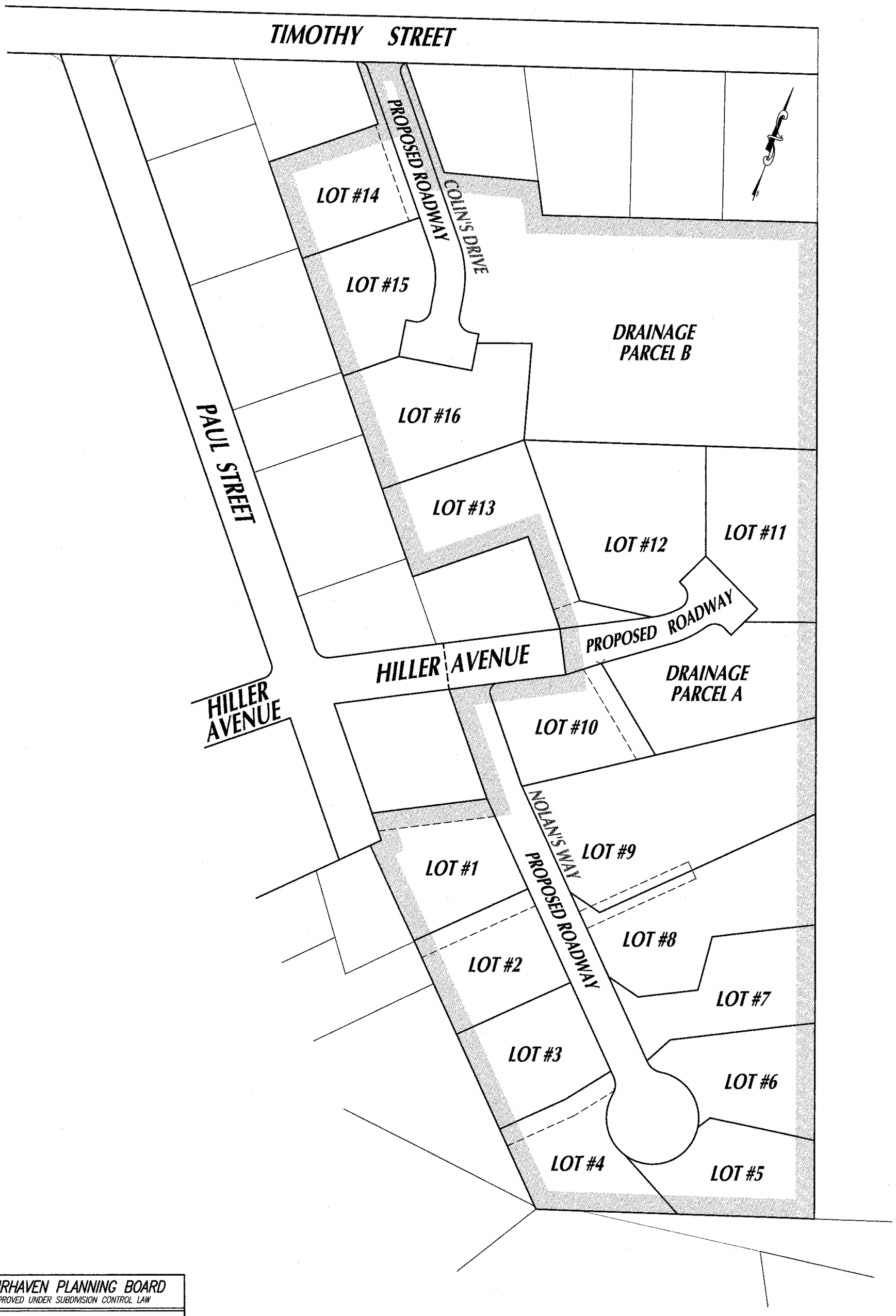

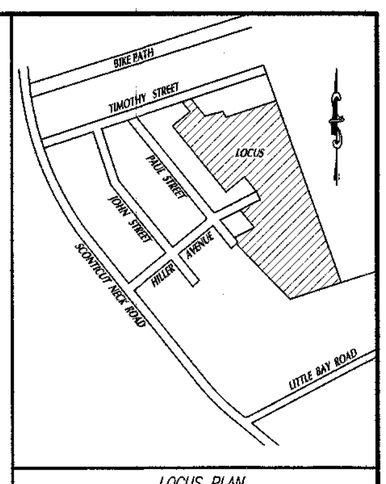

LOCUS PLAN
SCALE: 1"=600'±

PROPERTY INFORMATION:

ASSESSORS MAP: #28C
ASSESSORS LOT: #71 and #71A
LOCATION: HILLER STREET & TIMOTHY STREET
APPLICANTS/OWNERS:
JIMMY A. PAPAS & NICKOLAS L. PAPAS
c/o: JIMMY PAPAS, 14 BELMONT STREET
NEW BEDFORD, MA 02744
DEED BOOK 3956, PAGE 132

DEVELOPER:
ROBERT RODERIQUES

ZONING DISTRICT:
RESIDENCE A (RA)

MINIMUM LOT AREA: 15,000 Sq.Ft.
MIN. CONTIGUOUS UPLAND: 13,500 Sq.Ft.
MINIMUM FRONTAGE: 100.00 Ft.

MINIMUM BUILDING SETBACKS:
FRONT: 20' SIDE: 10'
REAR: 30'

MAXIMUM LOT COVERAGE = 50%
MAXIMUM BUILDING COVERAGE = 30%

TOTAL PROJECT/SITE LOT AREA = 10.85± ACRES

FEMA FLOOD ZONE: ZONE X
F.I.R.M. PANEL No.: 25005C0394G

NOTE: TWO PERMANENT CONCRETE MARKERS MUST BE PLACED ON THE SITE PRIOR TO CONSTRUCTION

PLAN INDEX

SHEET 1	"COVER SHEET"
SHEET 2	"LOTTING PLAN – NORTH & SOUTH"
SHEET 3	"EXISTING TOPOGRAPHICAL PLAN"
SHEET 4	"PROPOSED TOPOGRAPHICAL PLAN – NORTH"
SHEET 5	"PROPOSED TOPOGRAPHICAL PLAN – SOUTH"
SHEET 6	"PROPOSED UTILITY PLAN – NORTH"
SHEET 7	"PROPOSED UTILITY PLAN – SOUTH"
SHEET 8	"PROPOSED ROAD PROFILE PLAN – NORTH"
SHEET 9	"PROPOSED ROAD PROFILE PLAN – SOUTH"
SHEET 10	"CONSTRUCTION DETAILS"
SHEET 11	"CONSTRUCTION DETAILS"

Rev. #	DATE	BY	DESCRIPTION
4	12-02-19	D.M.D.	PEER REVIEW
3	8-30-19	D.M.D.	PEER REVIEW
2	5-17-19	D.M.D.	ADD ROAD PROFILES, CONSTRUCTION DETAILS CHANGE COMPANY NAME, PRELIMINARY TO DEFINITIVE
1	4-11-19	D.M.D.	REVISE GRADING & OMIT WAIVERS

FAIRHAVEN PLANNING BOARD
APPROVED UNDER SUBDIVISION CONTROL LAW

DATE APPROVED: _____

DATE SIGNED: _____

"THE ABOVE ENDORSEMENT IS NOT A DETERMINATIION AS TO CONFORMANCE WITH ZONING REGULATIONS OR A DETERMINATION THAT THE LOT IS BUILDABLE."

COMMONWEALTH OF MASSACHUSETTS
N. DOUGLAS SCHNEIDER
No. 47383
LAND SURVEYOR
12-4-19

"DEFINITIVE SUBDIVISION PLAN"
OF DEVELOPMENT TO BE KNOWN AS
"SCONTICUT NECK WOODS"
OFF
HILLER AVENUE and TIMOTHY STREET
IN
FAIRHAVEN, MA
PREPARED FOR
ROBERT RODERIQUES

SHEET 1 OF 11 SHEETS
COVER SHEET

SCALE: 1"=60' DATE: NOVEMBER 8, 2018
0 60 120 180

SCHNEIDER, DAVIGNON & LEONE, INC.
PROFESSIONAL CIVIL ENGINEERS & LAND SURVEYORS
1 COUNTY RD, P.O. BOX 480, MATTAPOISETT, MA 02739
1-508-758-7866

Drawn By: D.M.D.	Check By: N.D.S.	Job No. 3072

"I CERTIFY THAT THIS PLAN CONFORMS WITH THE RULES AND REGULATIONS OF THE REGISTERS OF DEEDS."

PREPARER

FOR REGISTRY USE ONLY

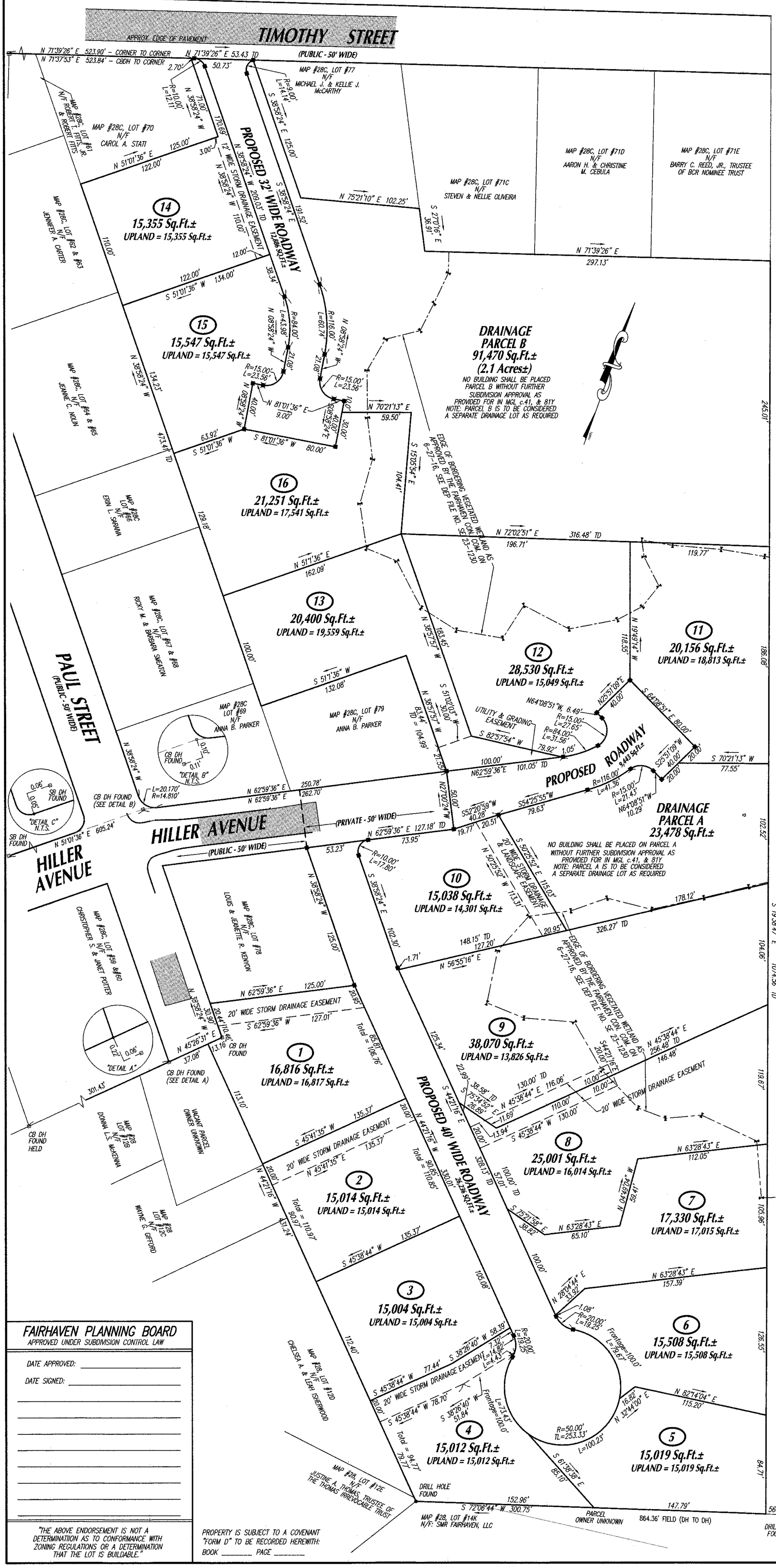

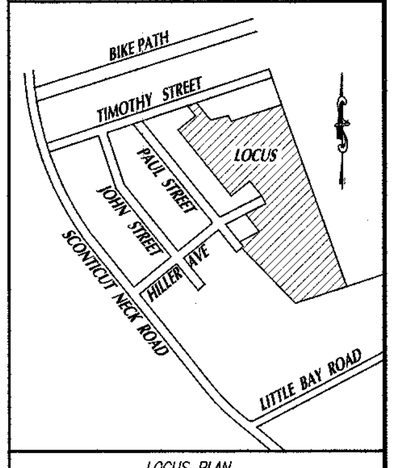

LOCUS PLAN
SCALE: 1"=600'±

PROPERTY INFORMATION:

ASSESSORS MAP: #28C
ASSESSORS LOT: #71 and #71A
LOCATION: HILLER STREET & TIMOTHY STREET
APPLICANTS/OWNERS:
JIMMY A. PAPAS & NICKOLAS L. PAPAS
c/o: JIMMY PAPAS, 14 BELMONT STREET
NEW BEDFORD, MA 02744
DEED BOOK 3956, PAGE 132
DEVELOPER:
ROBERT RODERIQUES
ZONING DISTRICT:
RESIDENCE A (RA)
MINIMUM LOT AREA: 15,000 Sq.Ft.
MIN. CONTIGUOUS UPLAND: 13,500 Sq.Ft.
MINIMUM FRONTAGE: 100.00 Ft.
MINIMUM BUILDING SETBACKS:
FRONT: 20' SIDE: 10'
REAR: 30'
MAXIMUM LOT COVERAGE = 50%
MAXIMUM BUILDING COVERAGE = 30%
TOTAL PROJECT/SITE LOT AREA = 10.85± ACRES
FEMA FLOOD ZONE: ZONE X
F.I.R.M. PANEL No.: 25005C0394G

NOTE: TWO PERMANENT CONCRETE MARKERS MUST BE PLACED ON THE SITE PRIOR TO CONSTRUCTION

LEGEND

IR = IRON ROD
DH = DRILL HOLE
FND = FOUND
CB = CONCRETE BOUND
SB = STONE BOUND
TD = TOTAL DISTANCE
■ = CONCRETE BOUNDS TO BE SET

N. DOUGLAS SCHNEIDER No. 47383 LAND SURVEYOR

FAIRHAVEN TOWN CLERK CERTIFICATION:

" I, _____, CLERK OF THE TOWN OF FAIRHAVEN HEREBY CERTIFY THAT NOTICE OF APPROVAL OF THIS PLAN BY THE PLANNING BOARD WAS RECEIVED AND RECORDED AT THIS OFFICE ON _____ AND THAT NO NOTICE OF APPEAL WAS RECEIVED DURING THE TWENTY DAYS NEXT FOLLOWING SUCH RECEIPT AND RECORDING OF SAID NOTICE."

TOWN CLERK _____ DATE _____

Rev. #	DATE	BY	DESCRIPTION
4	12-02-19	D.M.D.	PEER REVIEW
3	8-30-19	D.M.D.	PEER REVIEW
2	5-17-19	D.M.D.	ADD ROAD PROFILES, CONSTRUCTION DETAILS CHANGE COMPANY NAME, PRELIMINARY TO DEFINITIVE
1	4-11-19	D.M.D.	REVISE GRADING & OMIT WAIVERS

FAIRHAVEN PLANNING BOARD
APPROVED UNDER SUBDIVISION CONTROL LAW

DATE APPROVED: _____
DATE SIGNED: _____

"THE ABOVE ENDORSEMENT IS NOT A DETERMINATIION AS TO CONFORMANCE WITH ZONING REGULATIONS OR A DETERMINATION THAT THE LOT IS BUILDABLE."

PROPERTY IS SUBJECT TO A COVENANT "FORM D" TO BE RECORDED HEREWITH:
BOOK _____ PAGE _____

"DEFINITIVE SUBDIVISION PLAN"
OF DEVELOPMENT TO BE KNOWN AS
"SCONTICUT NECK WOODS"
OFF
HILLER AVENUE and TIMOTHY STREET
IN
FAIRHAVEN, MA
PREPARED FOR
ROBERT RODERIQUES

SHEET 2 OF 11 SHEETS
"LOTTING PLAN – NORTH & SOUTH"

SCALE: 1"=40' DATE: NOVEMBER 8, 2018
0 20 40 80 120

SCHNEIDER, DAVIGNON & LEONE, INC.
PROFESSIONAL CIVIL ENGINEERS & LAND SURVEYORS
1 COUNTY RD, P.O. BOX 480, MATTAPOISETT, MA 02739
1-508-758-7866

Drawn By: D.M.D. | Check By: N.D.S. | Job No. 3072

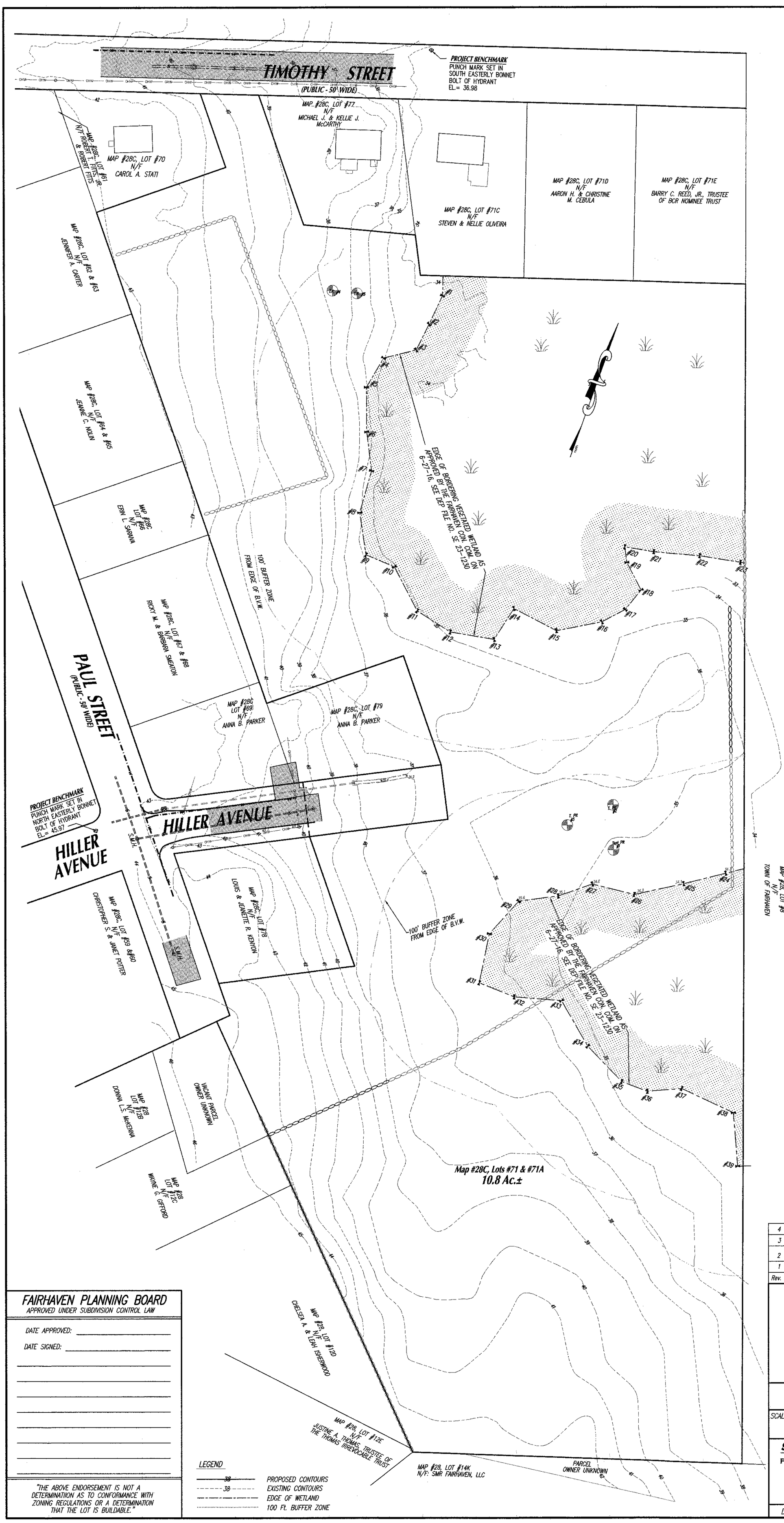

FOR REGISTRY USE ONLY

"I CERTIFY THAT THIS PLAN CONFORMS WITH THE RULES AND REGULATIONS OF THE REGISTERS OF DEEDS."

PREPARER

FAIRHAVEN PLANNING BOARD
APPROVED UNDER SUBDIVISION CONTROL LAW

DATE APPROVED: _____

DATE SIGNED: _____

"THE ABOVE ENDORSEMENT IS NOT A DETERMINATIION AS TO CONFORMANCE WITH ZONING REGULATIONS OR A DETERMINATION THAT THE LOT IS BUILDABLE."

N. DOUGLAS SCHNEIDER No. 47382

12-2-19

Rev. #	DATE	BY	DESCRIPTION
4	12-02-19	D.M.D.	PEER REVIEW
3	8-30-19	D.M.D.	PEER REVIEW
2	5-17-19	D.M.D.	ADD ROAD PROFILES, CONSTRUCTION DETAILS CHANGE COMPANY NAME, PRELIMINARY TO DEFINITIVE
1	4-11-19	D.M.D.	REVISE GRADING, OMIT WAIVERS

"DEFINITIVE SUBDIVISION PLAN"
OF DEVELOPMENT TO BE KNOWN AS
"SCONTICUT NECK WOODS"
OFF
HILLER AVENUE and TIMOTHY STREET
IN
FAIRHAVEN, MA
PREPARED FOR
ROBERT RODERIQUES

SHEET 3 OF 11 SHEETS
"EXISTING TOPOGRAPHICAL PLAN"

SCALE: 1"=40' DATE: NOVEMBER 8, 2018

0 20 40 80 120

SCHNEIDER, DAVIGNON & LEONE, INC.
PROFESSIONAL CIVIL ENGINEERS & LAND SURVEYORS
1 COUNTY RD, P.O. BOX 480, MATTAPOISETT, MA 02739
1-508-758-7866

Drawn By: D.M.D.	Check By: N.D.S.	Job No. 3072

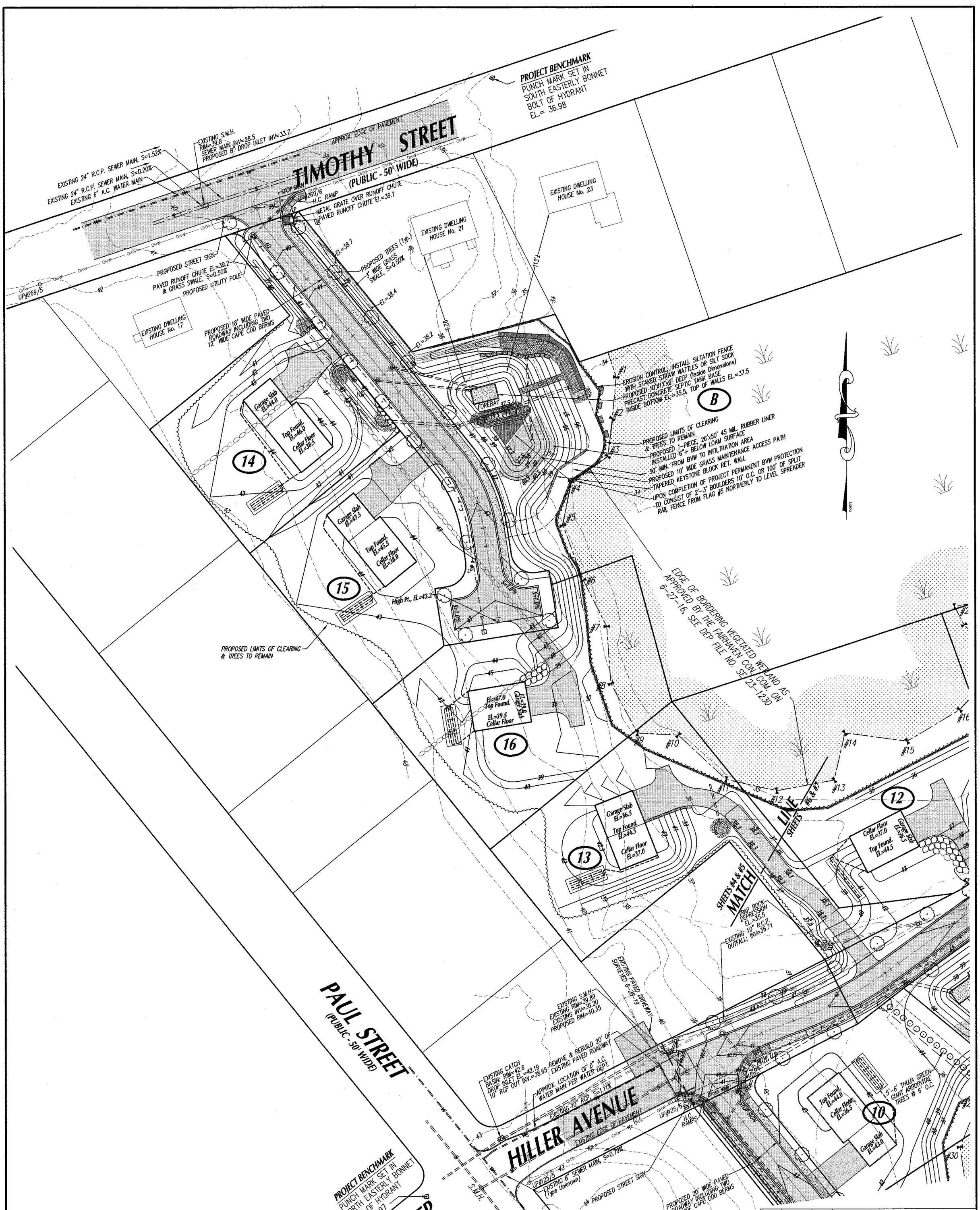

Rev. #	DATE	BY	DESCRIPTION
4	12-02-19	D.M.D.	PEER REVIEW
3	8-30-19	D.M.D.	PEER REVIEW
2	5-17-19	D.M.D.	ADD ROAD PROFILES, CONSTRUCTION DETAILS CHANGE COMPANY NAME, PRELIMINARY TO DEFINITIVE
1	4-11-19	D.M.D.	REVISE GRADING, OMIT WAIVERS

"DEFINITIVE SUBDIVISION PLAN"
OF DEVELOPMENT TO BE KNOWN AS
"SCONTICUT NECK WOODS"
OFF
HILLER AVENUE and TIMOTHY STREET
IN
FAIRHAVEN, MA
PREPARED FOR
ROBERT RODERIQUES

SHEET 4 OF 11 SHEETS
"PROPOSED TOPOGRAPHICAL PLAN – NORTH"

SCALE: 1"=30' DATE: NOVEMBER 8, 2018
0 30 60 90

SCHNEIDER, DAVIGNON & LEONE, INC.
PROFESSIONAL CIVIL ENGINEERS & LAND SURVEYORS
1 COUNTY RD, P.O. BOX 480, MATTAPOISETT, MA 02739
1-508-758-7866

Drawn By: D.M.D. | Check By: N.D.S. | Job No. 3072

FAIRHAVEN PLANNING BOARD
APPROVED UNDER SUBDIVISION CONTROL LAW

DATE APPROVED: _____

DATE SIGNED: _____

"THE ABOVE ENDORSEMENT IS NOT A DETERMINATIION AS TO CONFORMANCE WITH ZONING REGULATIONS OR A DETERMINATION THAT THE LOT IS BUILDABLE."

FOR REGISTRY USE ONLY

"I CERTIFY THAT THIS PLAN CONFORMS WITH THE RULES AND REGULATIONS OF THE REGISTERS OF DEEDS."

PREPARER

COMMONWEALTH OF MASSACHUSETTS DAVID M. DAVIGNON CIVIL No. 49867 REGISTERED PROFESSIONAL ENGINEER

12-04-19

"I CERTIFY THAT THIS PLAN CONFORMS WITH THE RULES AND REGULATIONS OF THE REGISTERS OF DEEDS."

PREPARER

FOR REGISTRY USE ONLY

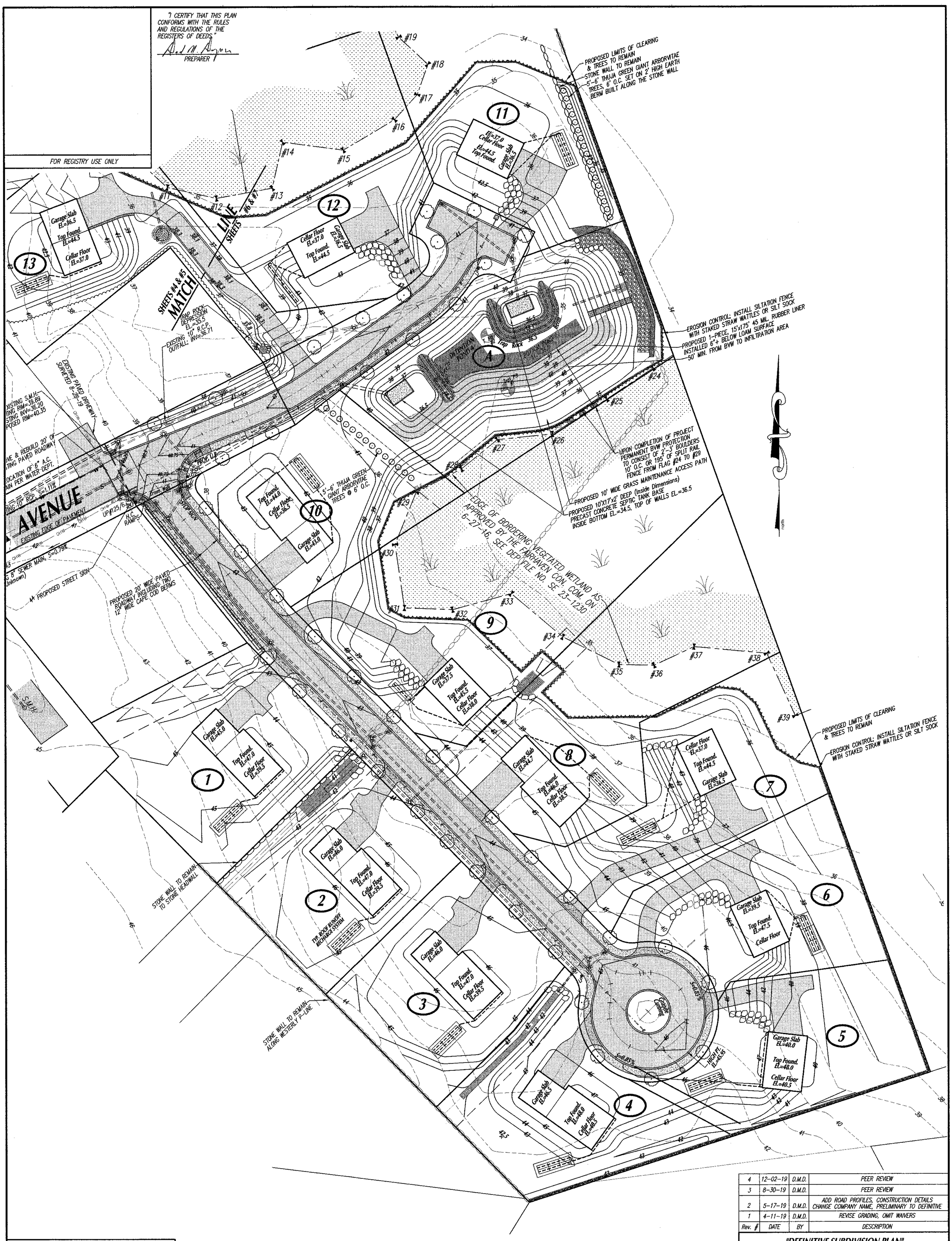

Rev. #	DATE	BY	DESCRIPTION
4	12-02-19	D.M.D.	PEER REVIEW
3	8-30-19	D.M.D.	PEER REVIEW
2	5-17-19	D.M.D.	ADD ROAD PROFILES, CONSTRUCTION DETAILS CHANGE COMPANY NAME, PRELIMINARY TO DEFINITIVE
1	4-11-19	D.M.D.	REVISE GRADING, OMIT WAIVERS

"DEFINITIVE SUBDIVISION PLAN"
OF DEVELOPMENT TO BE KNOWN AS
"SCONTICUT NECK WOODS"
OFF
HILLER AVENUE and TIMOTHY STREET
IN
FAIRHAVEN, MA
PREPARED FOR
ROBERT RODERIQUES

SHEET 5 OF 11 SHEETS
"PROPOSED TOPOGRAPHICAL PLAN – SOUTH"

SCALE: 1"=30' DATE: NOVEMBER 8, 2018
0 30 60 90

SCHNEIDER, DAVIGNON & LEONE, INC.
PROFESSIONAL CIVIL ENGINEERS & LAND SURVEYORS
1 COUNTY RD, P.O. BOX 480, MATTAPOISETT, MA 02739
1-508-758-7866

Drawn By: D.M.D. | Check By: N.D.S. | Job No. 3072

COMMONWEALTH OF MASSACHUSETTS DAVID M. DAVIGNON CIVIL NO. 18867 REGISTERED PROFESSIONAL ENGINEER

12-04-19

FAIRHAVEN PLANNING BOARD
APPROVED UNDER SUBDIVISION CONTROL LAW

DATE APPROVED: _____

DATE SIGNED: _____

"THE ABOVE ENDORSEMENT IS NOT A DETERMINATIION AS TO CONFORMANCE WITH ZONING REGULATIONS OR A DETERMINATION THAT THE LOT IS BUILDABLE."

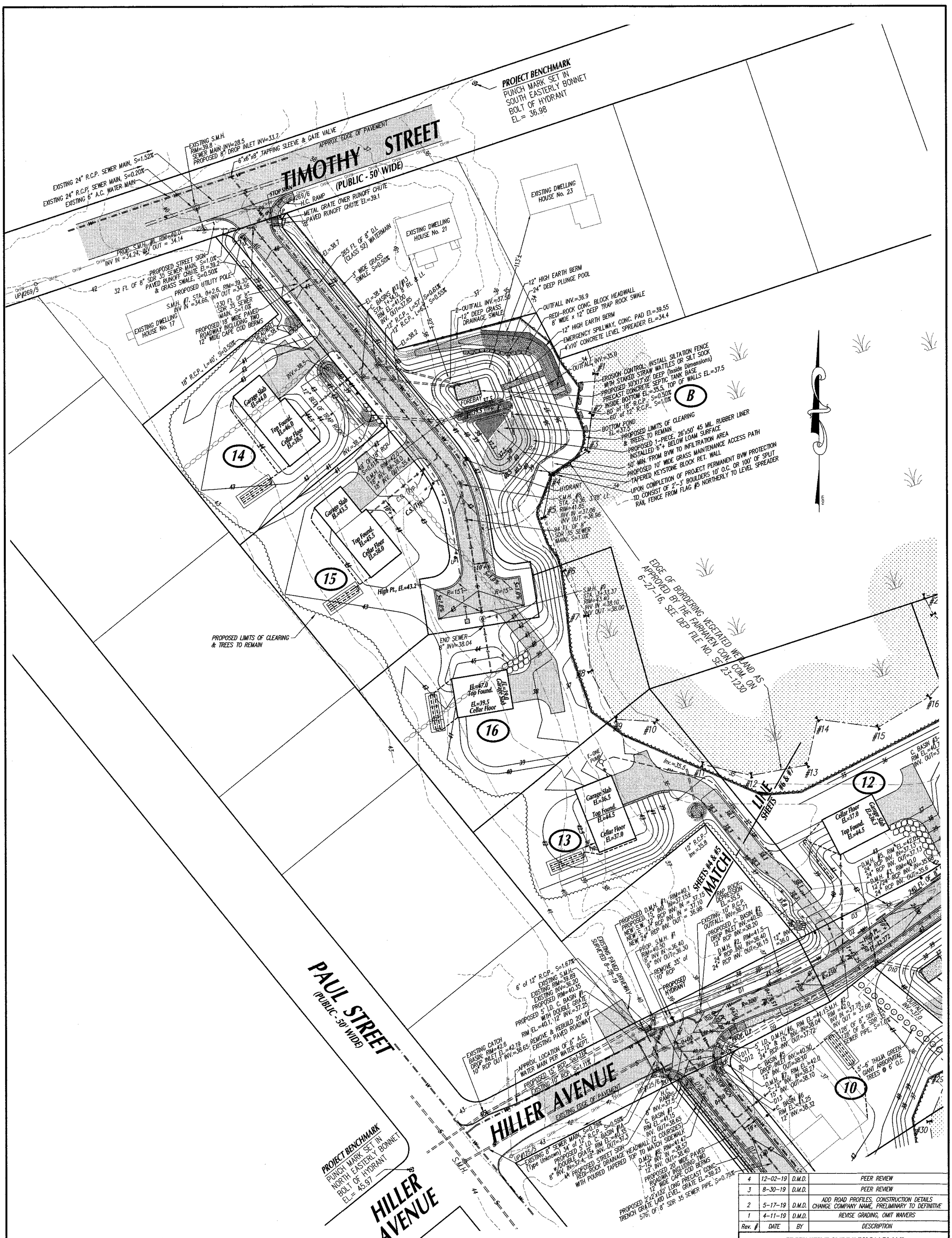

Rev. #	DATE	BY	DESCRIPTION
4	12-02-19	D.M.D.	PEER REVIEW
3	8-30-19	D.M.D.	PEER REVIEW
2	5-17-19	D.M.D.	ADD ROAD PROFILES, CONSTRUCTION DETAILS CHANGE COMPANY NAME, PRELIMINARY TO DEFINITIVE
1	4-11-19	D.M.D.	REVISE GRADING, OMIT WAIVERS

FAIRHAVEN PLANNING BOARD
APPROVED UNDER SUBDIVISION CONTROL LAW

DATE APPROVED: _____

DATE SIGNED: _____

"THE ABOVE ENDORSEMENT IS NOT A DETERMINATIION AS TO CONFORMANCE WITH ZONING REGULATIONS OR A DETERMINATION THAT THE LOT IS BUILDABLE."

FOR REGISTRY USE ONLY

"I CERTIFY THAT THIS PLAN CONFORMS WITH THE RULES AND REGULATIONS OF THE REGISTERS OF DEEDS."

PREPARER

COMMONWEALTH OF MASSACHUSETTS DAVID M. DAVIGNON CIVIL NO. 49837 REGISTERED PROFESSIONAL ENGINEER

12-04-19

"DEFINITIVE SUBDIVISION PLAN"
OF DEVELOPMENT TO BE KNOWN AS
"SCONTICUT NECK WOODS"
OFF
HILLER AVENUE and TIMOTHY STREET
IN
FAIRHAVEN, MA
PREPARED FOR
ROBERT RODERIQUES

SHEET 6 OF 11 SHEETS
"PROPOSED UTILITY PLAN – NORTH"

SCALE: 1"=30' DATE: NOVEMBER 8, 2018
0 30 60 90

SCHNEIDER, DAVIGNON & LEONE, INC.
PROFESSIONAL CIVIL ENGINEERS & LAND SURVEYORS
1 COUNTY RD, P.O. BOX 480, MATTAPOISETT, MA 02739
1-508-758-7866

Drawn By: D.M.D.	Check By: N.D.S.	Job No. 3072

"I CERTIFY THAT THIS PLAN CONFORMS WITH THE RULES AND REGULATIONS OF THE REGISTERS OF DEEDS."

PREPARER

FOR REGISTRY USE ONLY

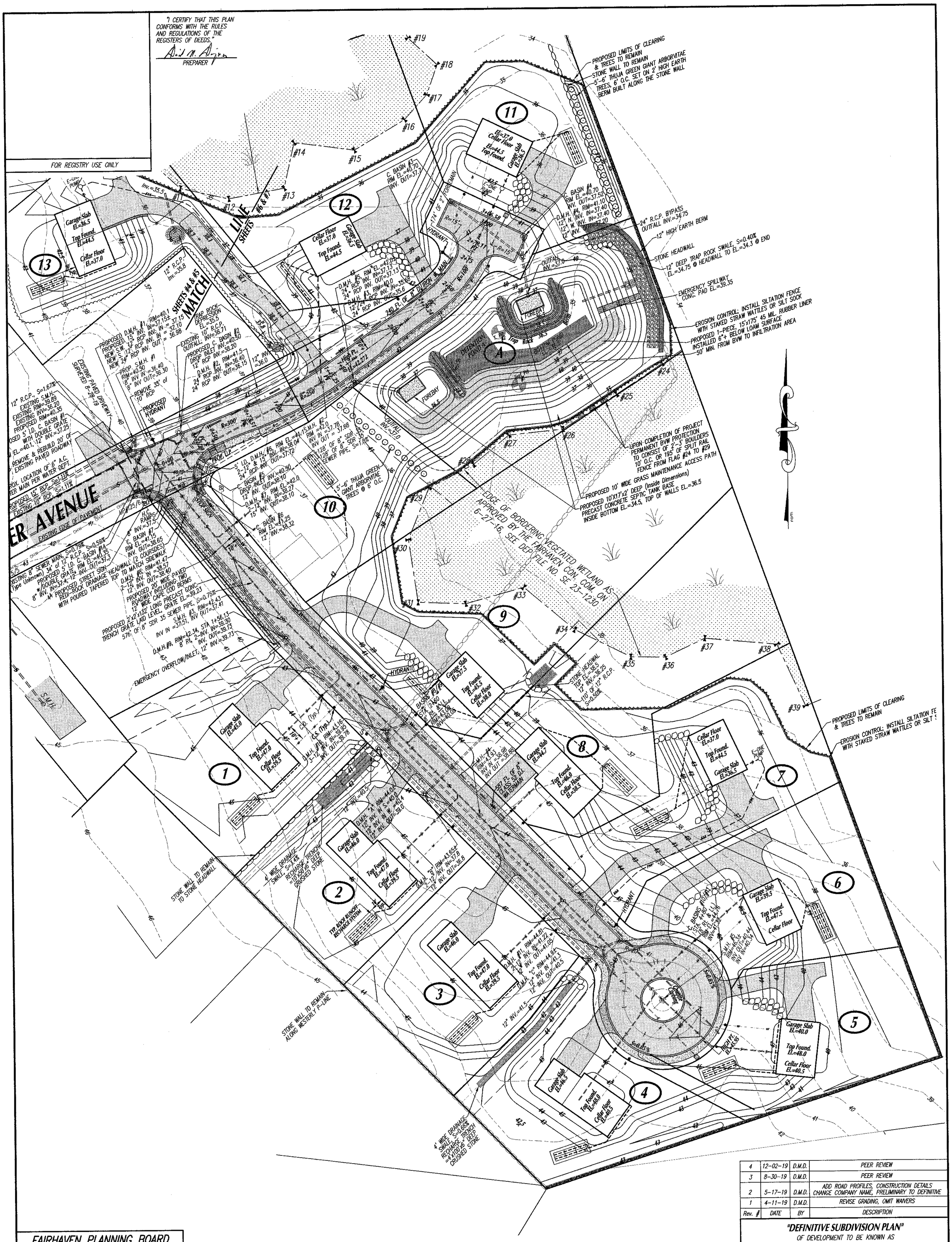

Rev. #	DATE	BY	DESCRIPTION
4	12-02-19	D.M.D.	PEER REVIEW
3	8-30-19	D.M.D.	PEER REVIEW
2	5-17-19	D.M.D.	ADD ROAD PROFILES, CONSTRUCTION DETAILS CHANGE COMPANY NAME, PRELIMINARY TO DEFINITIVE
1	4-11-19	D.M.D.	REVISE GRADING, OMIT WAIVERS

"DEFINITIVE SUBDIVISION PLAN"
OF DEVELOPMENT TO BE KNOWN AS
"SCONTICUT NECK WOODS"
OFF
HILLER AVENUE and TIMOTHY STREET
IN
FAIRHAVEN, MA
PREPARED FOR
ROBERT RODERIQUES

SHEET 7 OF 11 SHEETS
"PROPOSED UTILITY PLAN – SOUTH"

SCALE: 1"=30' DATE: NOVEMBER 8, 2018

0 30 60 90

SCHNEIDER, DAVIGNON & LEONE, INC.
PROFESSIONAL CIVIL ENGINEERS & LAND SURVEYORS
1 COUNTY RD, P.O. BOX 480, MATTAPOISETT, MA 02739
1-508-758-7866

Drawn By: D.M.D. | Check By: N.D.S. | Job No. 3072

COMMONWEALTH OF MASSACHUSETTS DAVID M. DAVIGNON CIVIL NO. 49857 REGISTERED PROFESSIONAL ENGINEER

12-04-19

FAIRHAVEN PLANNING BOARD
APPROVED UNDER SUBDIVISION CONTROL LAW

DATE APPROVED: _____

DATE SIGNED: _____

"THE ABOVE ENDORSEMENT IS NOT A DETERMINATIION AS TO CONFORMANCE WITH ZONING REGULATIONS OR A DETERMINATION THAT THE LOT IS BUILDABLE."

"I CERTIFY THAT THIS PLAN CONFORMS WITH THE RULES AND REGULATIONS OF THE REGISTERS OF DEEDS."

PREPARER

FOR REGISTRY USE ONLY

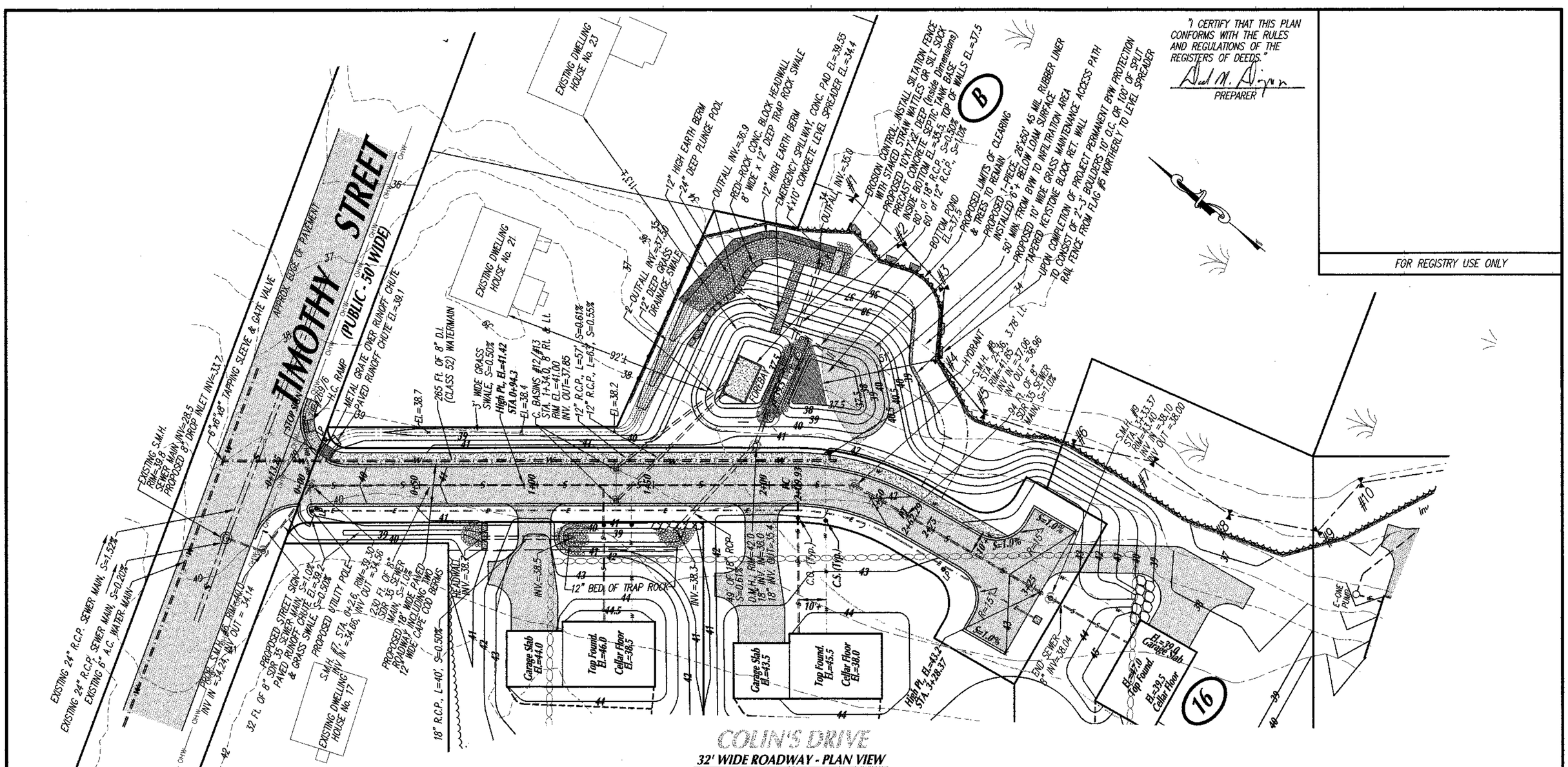

32' WIDE ROADWAY - PLAN VIEW

HORIZONTAL: 1"=30'

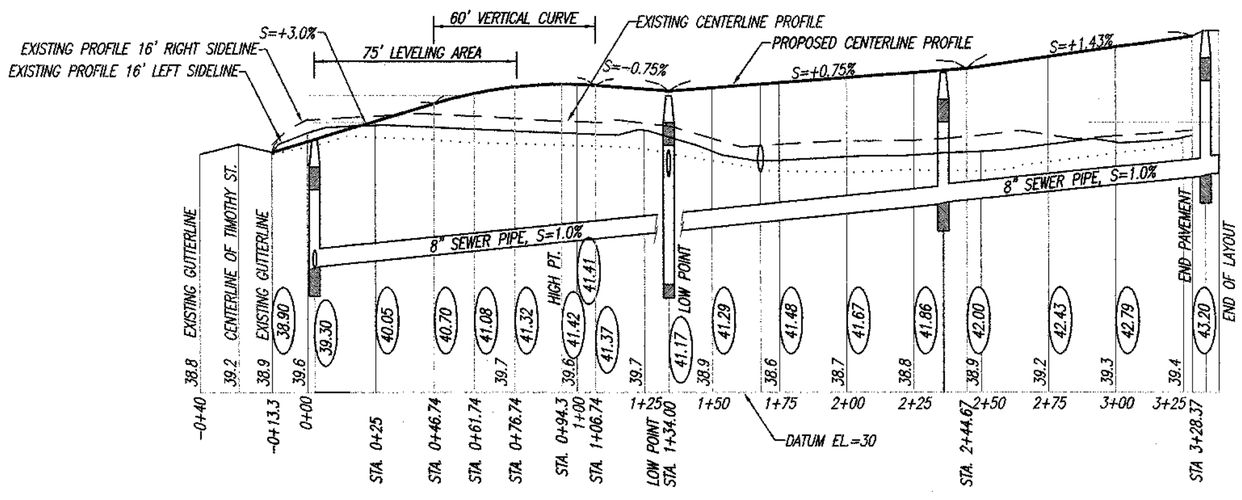

32' WIDE ROADWAY - PROFILE VIEW

VERTICAL: 1"=4'
HORIZONTAL: 1"=40'

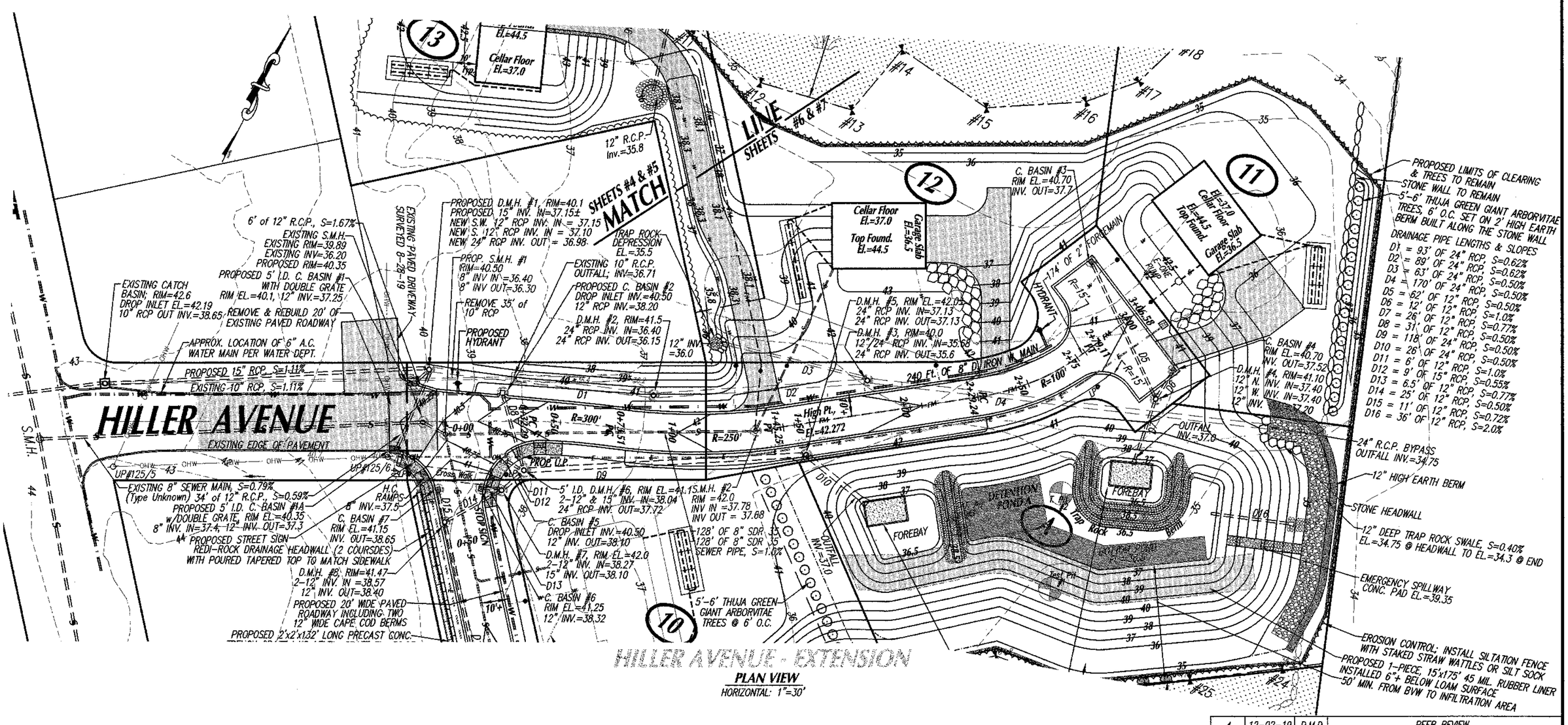

HILLER AVENUE - EXTENSION

PLAN VIEW

HORIZONTAL: 1"=30'

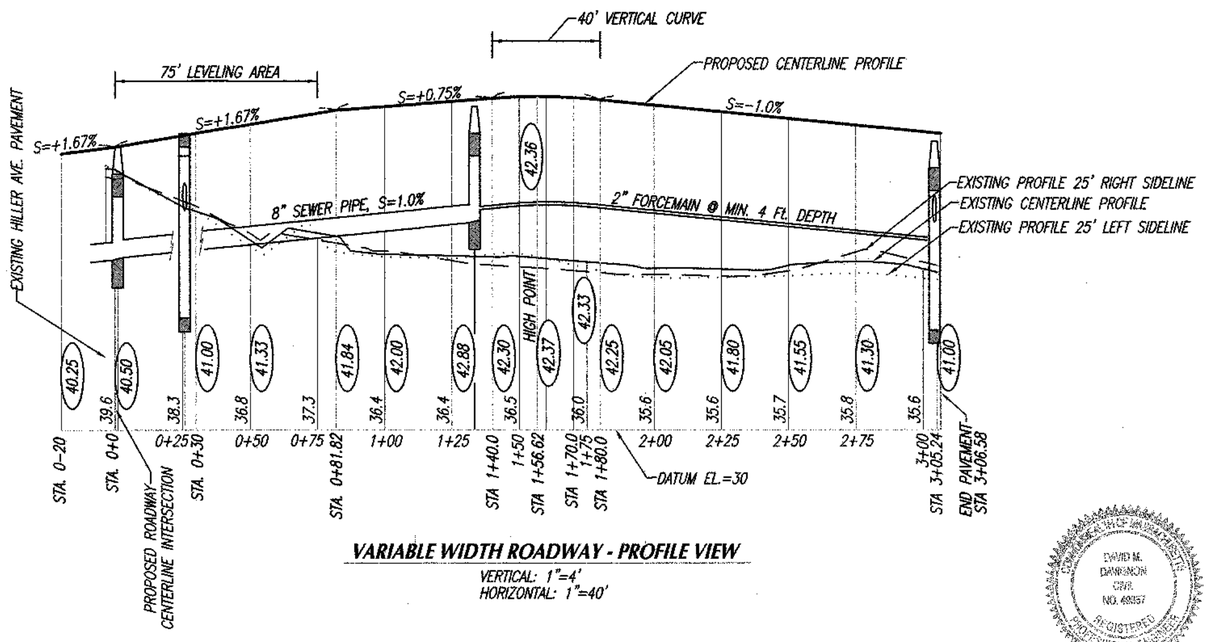

VARIABLE WIDTH ROADWAY - PROFILE VIEW

VERTICAL: 1"=4'
HORIZONTAL: 1"=40'

Rev. #	DATE	BY	DESCRIPTION
4	12-02-19	D.M.D.	PEER REVIEW
3	8-30-19	D.M.D.	PEER REVIEW
2	5-17-19	D.M.D.	ADD ROAD PROFILES, CONSTRUCTION DETAILS CHANGE COMPANY NAME, PRELIMINARY TO DEFINITIVE
1	4-11-19	D.M.D.	REVISE GRADING & OMIT WAIVERS

"DEFINITIVE SUBDIVISION PLAN"
OF DEVELOPMENT TO BE KNOWN AS
"SCONTICUT NECK WOODS"
OFF
HILLER AVENUE and TIMOTHY STREET
IN
FAIRHAVEN, MA
PREPARED FOR
ROBERT RODERIQUES

SHEET 8 OF 11 SHEETS
"PROPOSED ROAD PROFILE PLAN - NORTH"

SCALE: AS NOTED — DATE: NOVEMBER 8, 2018
0 20 40 80 120

SCHNEIDER, DAVIGNON & LEONE, INC.
PROFESSIONAL CIVIL ENGINEERS & LAND SURVEYORS
1 COUNTY RD, P.O. BOX 480, MATTAPOISETT, MA 02739
1-508-758-7866

Drawn By: D.M.D. | Check By: N.D.S. | Job No. 3072

FAIRHAVEN PLANNING BOARD
APPROVED UNDER SUBDIVISION CONTROL LAW

DATE APPROVED: _____

DATE SIGNED: _____

"THE ABOVE ENDORSEMENT IS NOT A DETERMINATIION AS TO CONFORMANCE WITH ZONING REGULATIONS OR A DETERMINATION THAT THE LOT IS BUILDABLE."

DAVID M. DAVIGNON CIVIL NO. 49357 REGISTERED PROFESSIONAL ENGINEER

12-04-19

"I CERTIFY THAT THIS PLAN CONFORMS WITH THE RULES AND REGULATIONS OF THE REGISTERS OF DEEDS."

PREPARER

FOR REGISTRY USE ONLY

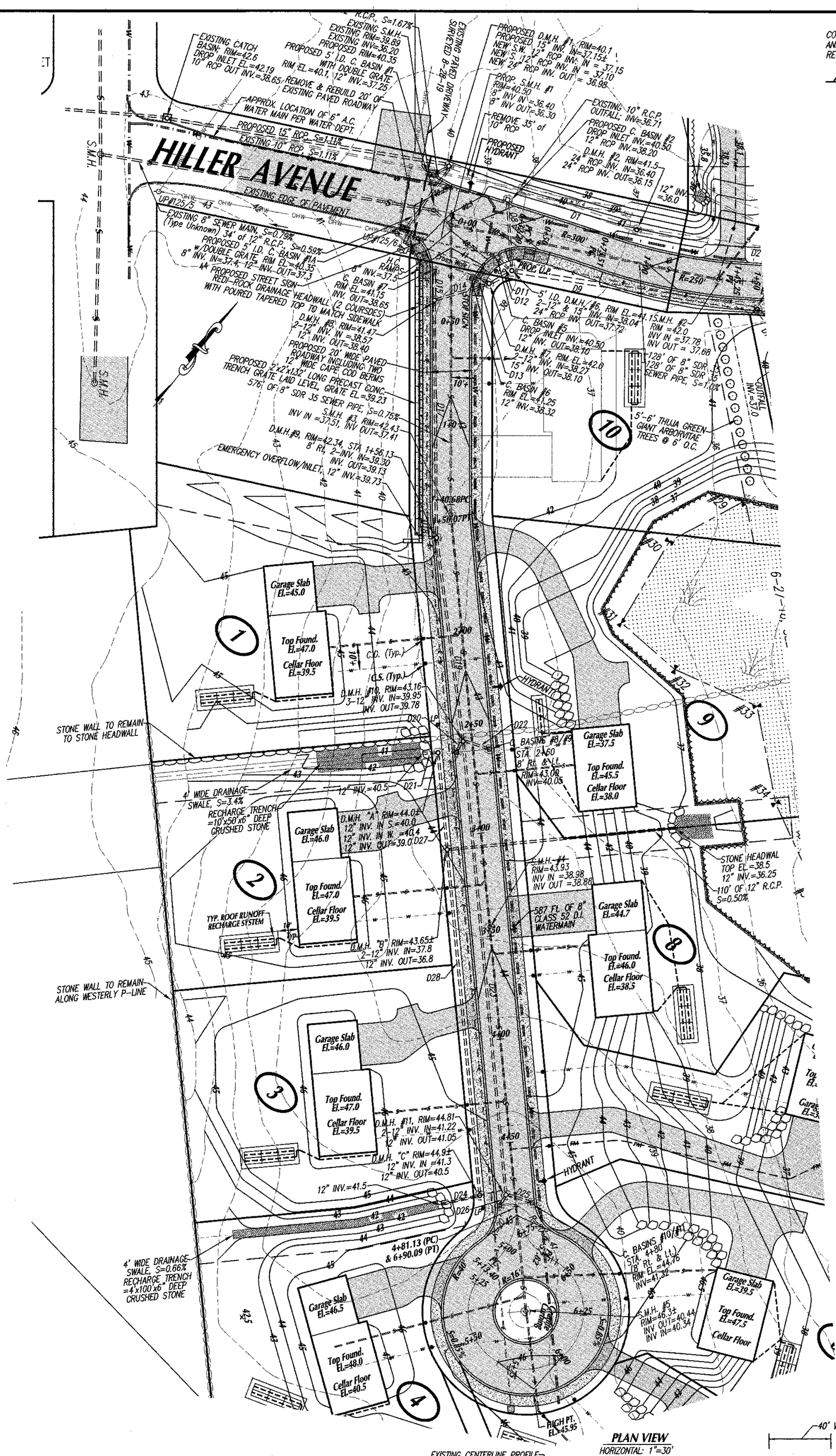

DRAINAGE PIPE LENGTHS & SLOPES

D11 = 5' OF 12" RCP, S=1.0%
D12 = 10' OF 12" RCP, S=0.50%
D13 = 6.5' OF 12" RCP, S=0.77%
D14 = 25' OF 12" RCP, S=0.50%
D15 = 11' OF 12" RCP, S=0.72%
D16 = 36' OF 12" RCP, S=3.38%
D17 = 112' OF 12" RCP, S=0.50%
D18 = 7' OF 12" RCP, S=1.42%
D19 = 96' OF 12" RCP, S=0.50%
D20 = 4' OF 12" RCP, S=2.5%
D21 = 6' OF 12" RCP, S=1.67%
D22 = 10' OF 12" RCP, S=1.0%
D23 = 217' OF 12" RCP, S=0.50%
D24 = 18' OF 12" RCP, S=1.11%
D25 = 10' OF 12" RCP, S=1.0%
D26 = 4' OF 12" RCP, S=2.5%
D27 = 44' OF 12" RCP, S=2.72%
D28 = 165' OF 12" RCP, S=1.63%

PLAN VIEW
HORIZONTAL: 1"=30'

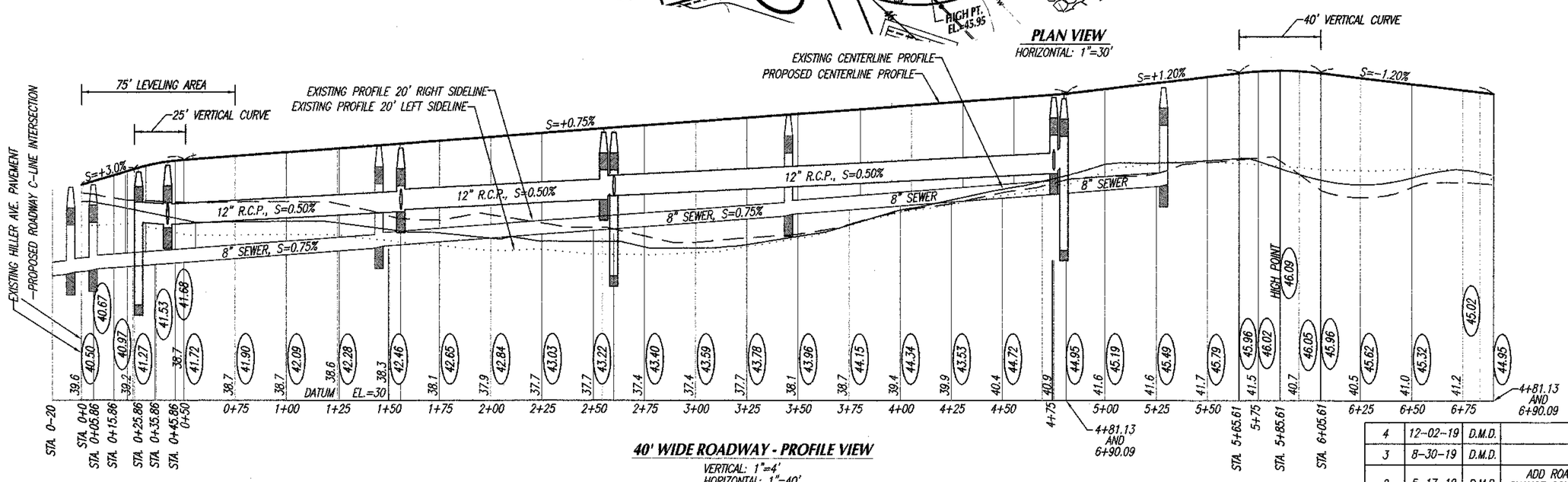

40' WIDE ROADWAY - PROFILE VIEW
VERTICAL: 1"=4'
HORIZONTAL: 1"=40'

NOLAN'S WAY

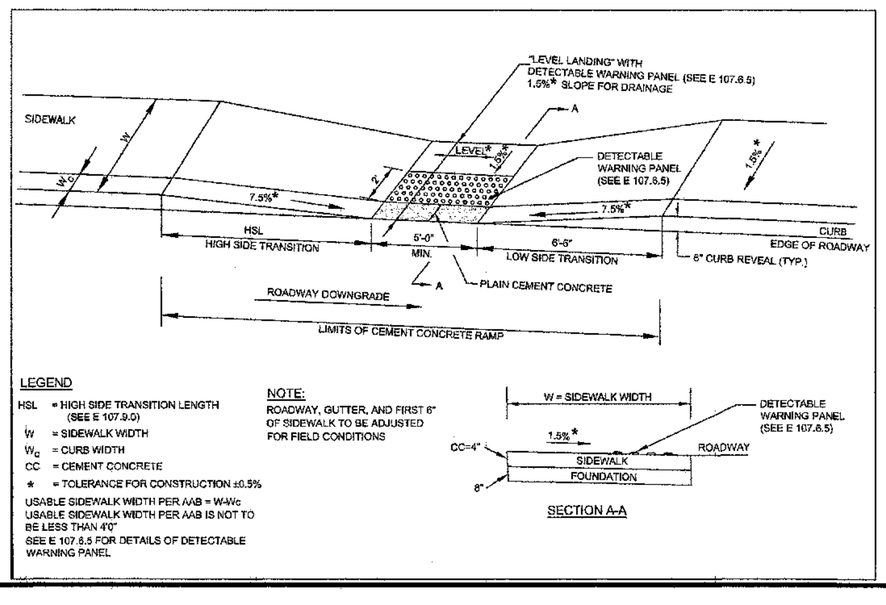

Rev. #	DATE	BY	DESCRIPTION
4	12-02-19	D.M.D.	PEER REVIEW
3	8-30-19	D.M.D.	PEER REVIEW
2	5-17-19	D.M.D.	ADD ROAD PROFILES, CONSTRUCTION DETAILS CHANGE COMPANY NAME, PRELIMINARY TO DEFINITIVE
1	4-11-19	D.M.D.	REVISE GRADING & OMIT WAIVERS

FAIRHAVEN PLANNING BOARD
APPROVED UNDER SUBDIVISION CONTROL LAW

DATE APPROVED: _____

DATE SIGNED: _____

"THE ABOVE ENDORSEMENT IS NOT A DETERMINATION AS TO CONFORMANCE WITH ZONING REGULATIONS OR A DETERMINATION THAT THE LOT IS BUILDABLE."

"DEFINITIVE SUBDIVISION PLAN"
OF DEVELOPMENT TO BE KNOWN AS
"SCONTICUT NECK WOODS"
OFF
HILLER AVENUE and TIMOTHY STREET
IN
FAIRHAVEN, MA
PREPARED FOR
ROBERT RODERIQUES

SHEET 9 OF 11 SHEETS
"PROPOSED ROAD PROFILE PLAN - NORTH"

SCALE: AS NOTED — DATE: NOVEMBER 8, 2018

0 20 40 80 120

SCHNEIDER, DAVIGNON & LEONE, INC.
PROFESSIONAL CIVIL ENGINEERS & LAND SURVEYORS
1 COUNTY RD, P.O. BOX 480, MATTAPOISETT, MA 02739
1-508-758-7866

Drawn By: D.M.D. | Check By: N.D.S. | Job No. 3072

FOR REGISTRY USE ONLY

"I CERTIFY THAT THIS PLAN CONFORMS WITH THE RULES AND REGULATIONS OF THE REGISTERS OF DEEDS."

PREPARER

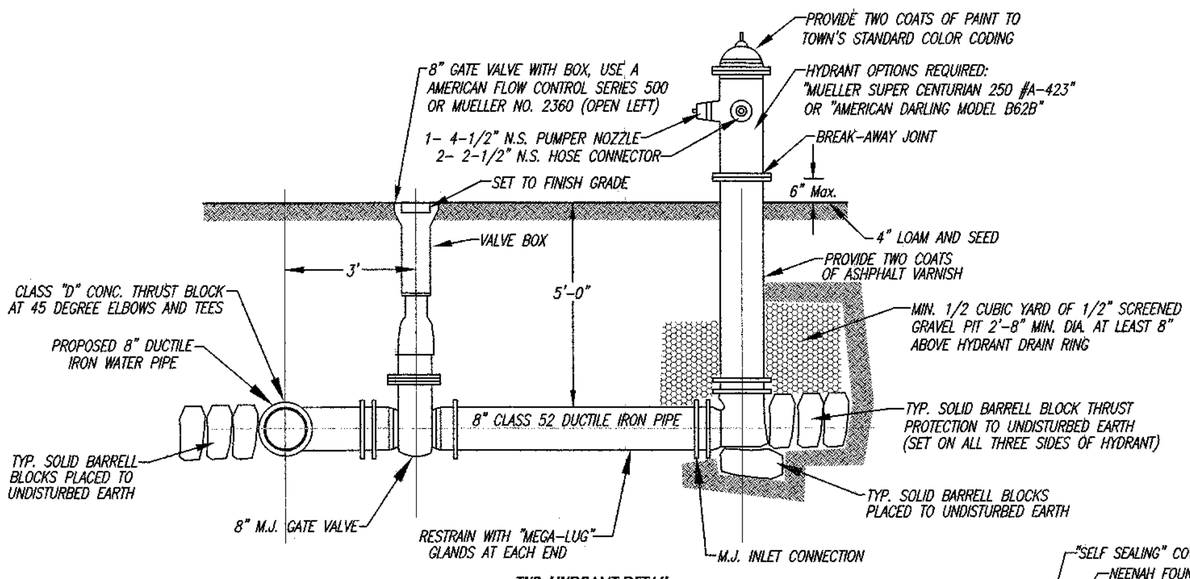

TYP. HYDRANT DETAIL
"Not to Scale"

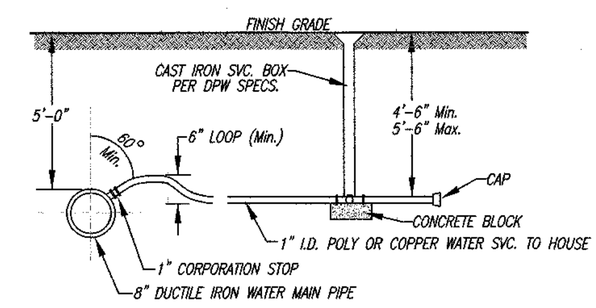

WATER SERVICE DETAIL
Not to Scale

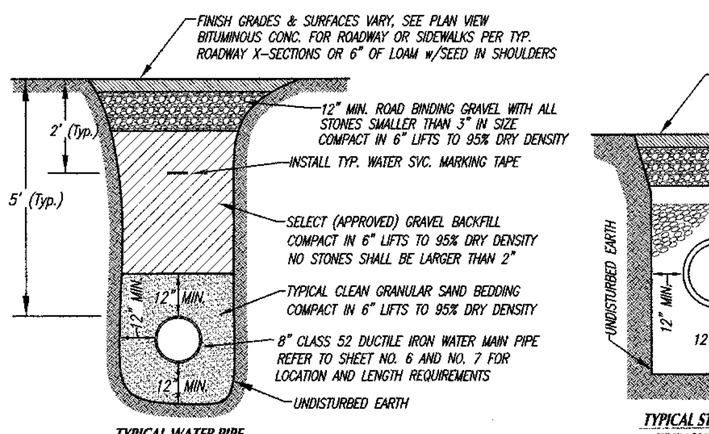

TYPICAL WATER PIPE TRENCH X-SECTION
"Not to Scale"

NOTE: ALL WATER PIPE, CONNECTIONS & INSTALLATION WORK SHALL CONFORM TO FAIRHAVEN BPW STANDARDS & SPECIFICATIONS

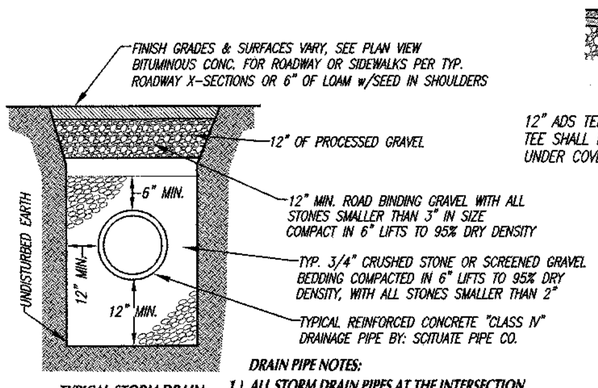

TYPICAL STORM DRAIN TRENCH X-SECTION
"Not to Scale"

DRAIN PIPE NOTES:
1.) ALL STORM DRAIN PIPES AT THE INTERSECTION OF HILLER AVENUE AND NOLAN'S WAY SHALL BE ENCASED IN A MIN. OF 6" OF CONCRETE
2.) THE CROSSING STORM DRAIN PIPES AT THE HILLER AVENUE HAMMERHEAD SHALL BE ENCASED IN A MIN. OF 6" OF CONCRETE

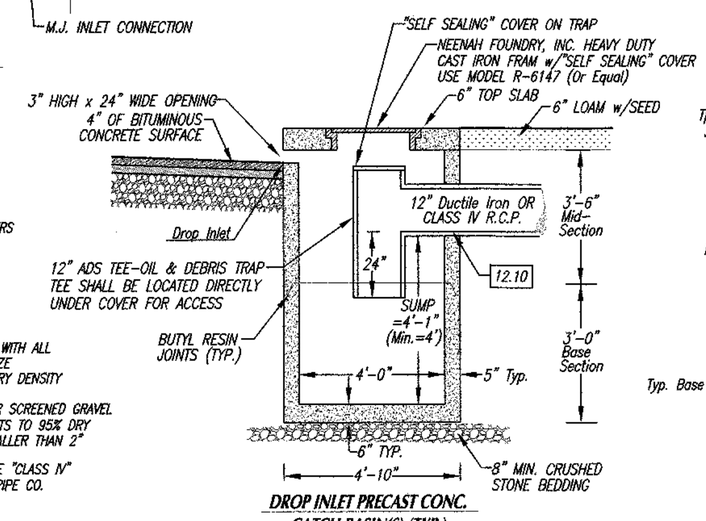

DROP INLET PRECAST CONC. CATCH BASIN(S) (TYP.)
SCITUATE PRECAST CO. (OR EQUAL)
"Not to Scale"

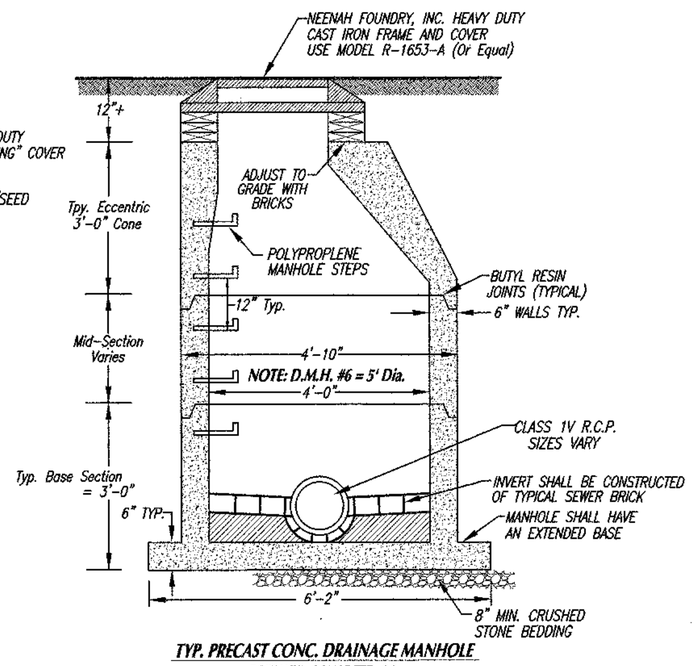

TYP. PRECAST CONC. DRAINAGE MANHOLE
SCITUATE CONCRETE CO.
(OR EQUIVALENT)
"Not to Scale"

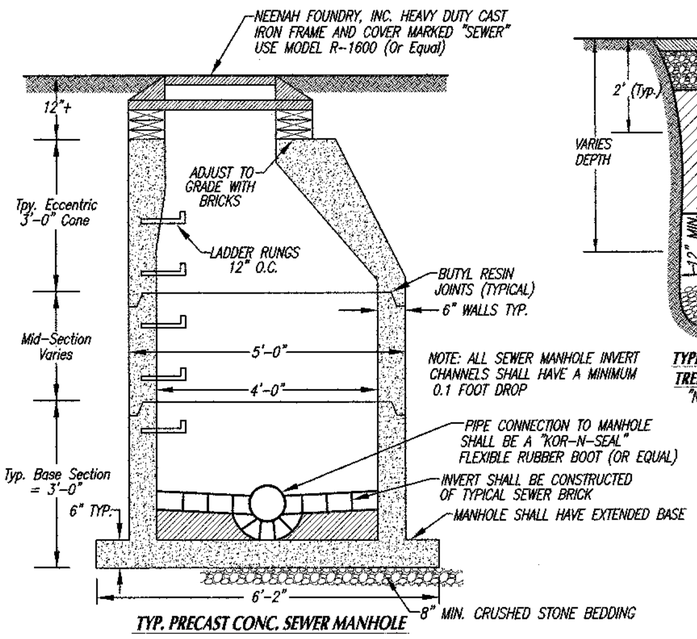

TYP. PRECAST CONC. SEWER MANHOLE
SHEA CONCRETE PRODUCTS, INC.
(OR EQUIVALENT)
"Not to Scale"

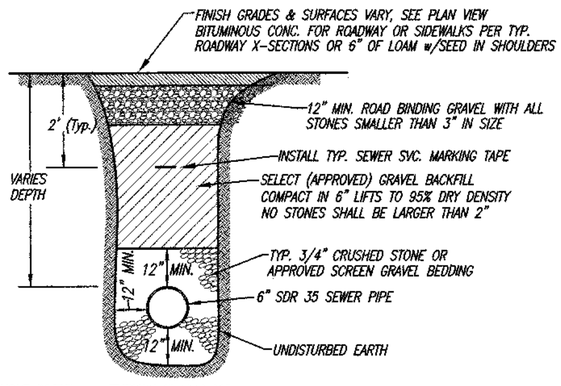

TYPICAL SEWER PIPE TRENCH X-SECTION
"Not to Scale"

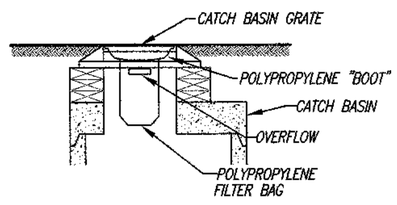

TEMPORARY CATCH BASIN FILTER

TECHNICAL SPECIFICATIONS:
(STREAMGUARD TYPE 11-S OR EQUIVALENT)
CONSTRUCTION MATERIAL: NONWOVEN POLYPROPYLENE
MAXIMUM OVERFLOW RATE: GREATER THAN 200 G.P.M.
MAXIMUM FILTRATION RATE: GREATER THAN 50 G.P.M. (Type-- S)
ABSORPBENT MATERIAL: POLYPROPYLENE
MAXIMUM FILTRATION RATE: GREATER THAN 5-8 G.P.M. (Type-- 0)
BOOT ADAPTER DIMENSIONS: 36"x 36"
NOMINAL DEPTH: 18"

NOTES:
1.) BOOT ADAPTER MAY BE TRIMMED TO SIZE FOR A NEAT APPEARANCE.
2.) CHECK FILTER BAG ONCE EVERY WEEK DURING CONSTRUCTION AND IMMEDIATELY AFTER EACH RAINFALL EVENT.

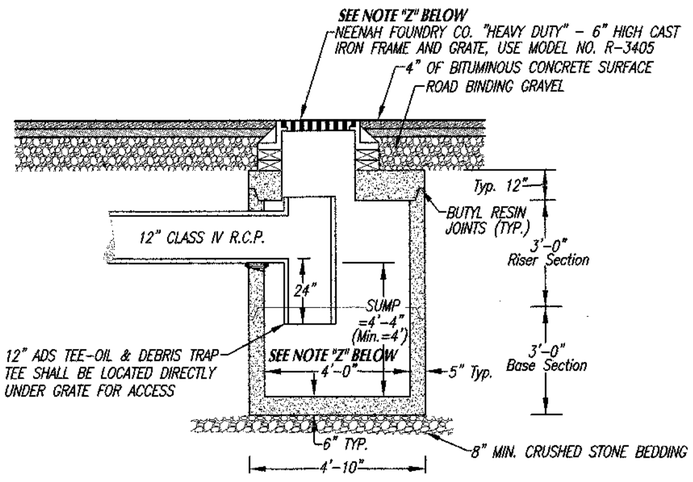

PRECAST CONC. CATCH BASIN
SCITUATE PRECAST CO. (OR EQUAL)
"Not to Scale"

NOTE "Z": CATCH BASINS #1 & #1A SHALL BE 5' INSIDE DIA. AND FITTED WITH DOUBLE GRATES

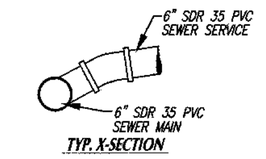

TYP. X-SECTION

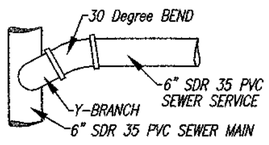

PLAN VIEW

TYP. SEWER CONNECTION DETAILS
"Not to Scale"

NOTE: ALL SEWER INSTALLATION WORK SHALL CONFORM TO FAIRHAVEN BPW STANDARDS & SPECIFICATIONS

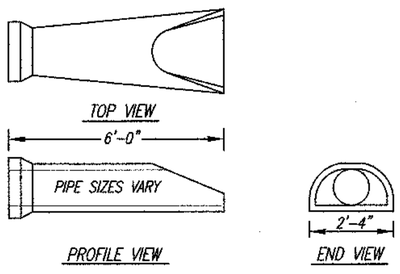

REINFORCED CONCRETE FLARED END SECTION DETAILS

SEWER MANHOLE CONSTRUCTION NOTES:
1.) CONCRETE SHALL BE 4,000 lbs. AT 28 DAYS
2.) REINFORCED STEEL SHALL CONFORM TO LATEST ASTM A-185 SPECIFICATIONS.
3.) MANHOLES SHALL BE BE CAPABLE OF WITHSTANDING "H-20 WHEEL LOADING".
4.) BUTYL RESIN SECTION JOINT SHALL CONFORM TO LATEST ASTM C443 SPECIFICATIONS.
5.) STEEL REINFORCED COPOLYMER POLYPROPYLENE PLASTIC STEPS SHALL CONFORM TO LATEST ASTM C478 SPECIFICATIONS.
6.) MANHOLE EXTERIORS SHALL BE COATED WITH 2 COATS OF FACTORY APPLIED BITUMASTIC.

PRECAST CONCRETE STRUCTURES NOTES:
1.) BRICKS SHALL CONFORM TO ASTM C-32, GRADE MA. RADIAL CONCRETE BLOCKS SHALL BE NOT LESS THAN 8" IN LENGTH AND OF SUCH SHAPE THAT THE JOINTS CAN BE EFFECTIVELY SEALED AND BONDED WITH MORTAR. THEY SHALL CONFORM TO ASTM C-139. PRECAST RINGS SHALL CONFORM TO ASTM C-14.
2.) ALL CONCRETE SHALL HAVE A MINIMUM COMPRESSIVE STRENGTH OF 4000 PSI AT 28 DAYS.
3.) REINFORCING STEEL SHALL CONFORM TO ASTM A-305 FOR BAR REINFORCEMENT AND ASTM A-185 FOR WIRE MESH.
4.) MORTAR FOR MASONRY WORKAND PIPE JOINTS SHALL CONSIST OF ONE PART PORTLAND CEMENT TO TWO PARTS SAND. PORTLAND CEMENT SHALL CONFORM TO ASTM C-150, TYPE II. SAND SHALL CONFORM TO ASTM C-144. THE MORTAR SHALL BE USED WITHIN THIRTY (30) MINUTES FROM THE TIME THE INGREDIENTS ARE MIXED WITH WATER. THE WATER SHALL BE CLEAN AND FREE FROM IMPURITIES.
5.) ALL STRUCTURES SHALL BE BE CAPABLE OF WITHSTANDING "H-20 WHEEL LOADING".
6.) BUTYL RESIN SECTION JOINT SHALL CONFORM TO LATEST ASTM C443 SPECIFICATIONS.
7.) CATCH BASIN EXTERIOR SHALL BE COATED WITH 2 COATS OF FACTORY APPLIED BITUMASTIC.
8.) TYPICAL MANHOLE STEPS ARE PROHIBITED IN CATCH BASINS

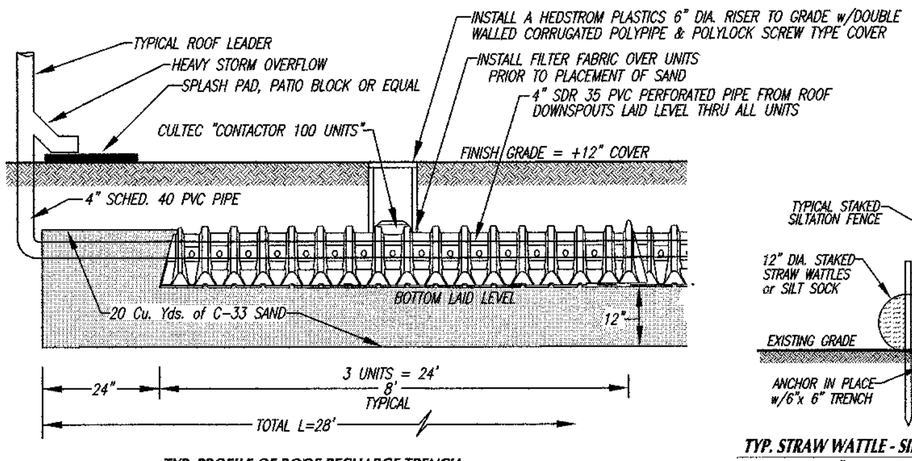

TYP. PROFILE OF ROOF RECHARGE TRENCH
Not to Scale

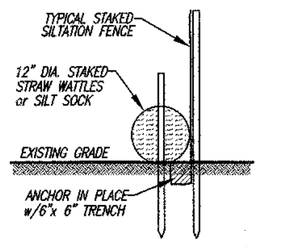

TYP. STRAW WATTLE - SILTATION DETAIL
"Not to Scale"

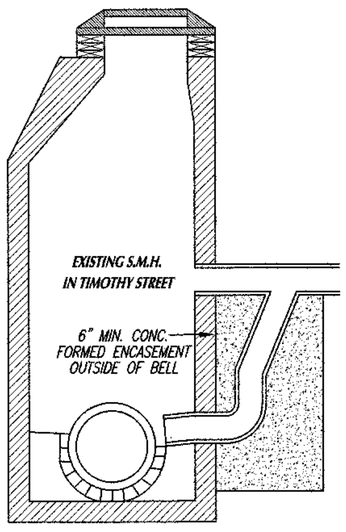

S.M.H. DROP INLET DETAIL
"Not to Scale"

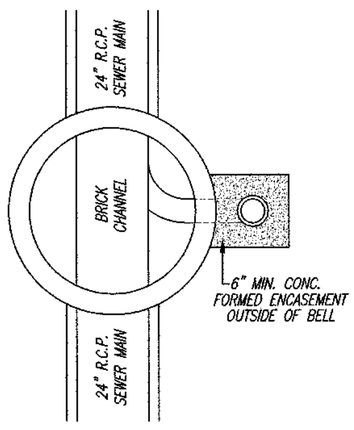

TOP VIEW
"Not to Scale"

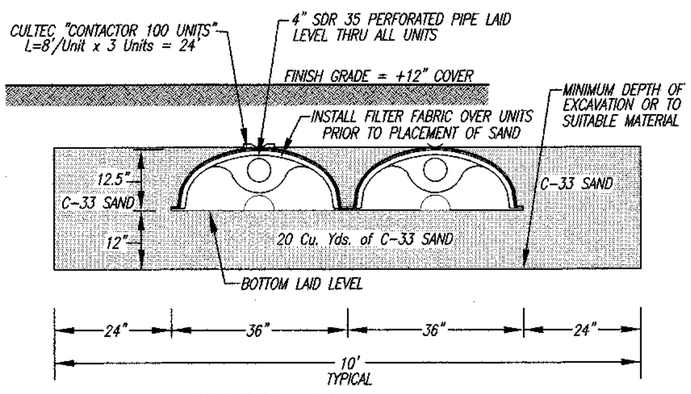

TYP. X-SECTION OF ROOF RECHARGE TRENCH
Not to Scale

POND A - TEST PIT DATA
DATE OF SOIL EVALUATIONS: DECEMBER 11, 2009
SOIL EVALUATOR: N. DOUGLAS SCHNEIDER, P.E., P.L.S., C.S.E.
ENGINEERING FIRM: N. DOUGLAS SCHNEIDER & ASSOCIATES, INC.

Depth	TEST PIT #1	Elev.	TEST PIT #2	Elev.	TEST PIT #3	Elev.
0"	HORIZON A LOAM 10 YR 2/2	34.9	HORIZON A LOAM 10 YR 2/2	35.4	HORIZON A LOAM 10 YR 2/2	35.5
10"		34.1		34.6		34.7
12"	Soil Mottling	33.9	Soil Mottling	34.2	Soil Mottling	34.5
	HORIZON B SANDY LOAM 2.5 Y 5/4		HORIZON B SANDY LOAM 2.5 Y 5/4		HORIZON B SANDY LOAM 2.5 Y 5/4	
27"	Weeping	32.6			Weeping	34.0
30"		32.4		32.9		33.5
	HORIZON C1 FINE SANDY LOAM 2.5 Y 5/1		HORIZON C1 FINE SANDY LOAM 2.5 Y 5/1		HORIZON C1 FINE SANDY LOAM 2.5 Y 5/1 Packed w/Sand	
45"		31.2		31.7		33.0
	HORIZON C2 SAND & GRAVEL 2.5 Y 6/2		HORIZON C2 SAND & GRAVEL 2.5 Y 6/2		HORIZON C2 FINE SANDY LOAM 2.5 Y 5/1 Packed	
60"		29.9				31.0
	HORIZON C3 LOAMY SAND 2.5 Y 6/3				HORIZON C3 SAND & GRAVEL 2.5 Y 6/3	
72"		28.9		29.4		28.8
	MOTTLING @ 12" WEEPING @ 27" STANDING WATER @ 48"		MOTTLING @ 15" WEEPING - None STANDING WATER @ 60"		MOTTLING @ 12" WEEPING @ 18" STANDING WATER @ 60"	

POND B - TEST PIT DATA
DATE OF SOIL EVALUATIONS: DECEMBER 11, 2009
SOIL EVALUATOR: N. DOUGLAS SCHNEIDER, P.E., P.L.S., C.S.E.
ENGINEERING FIRM: N. DOUGLAS SCHNEIDER & ASSOCIATES, INC.

Depth	TEST PIT #4	Elev.	TEST PIT #5	Elev.
0"	HORIZON A LOAM 10 YR 3/3	37.7	HORIZON A LOAM 10 YR 2/2	36.7
10"		36.9		36.2
	HORIZON B SANDY LOAM 10 YR 4/6		Soil Mottling	35.2
27"	Soil Mottling	35.5	HORIZON B SANDY LOAM 2.5 Y 5/4	
	HORIZON C1 LOAMY SAND 2.5 Y 6/3 w/Gravel and Cobbles			34.7
			HORIZON C1 FINE SANDY LOAM 5 Yr 5/3 Packed	
36"				33.7
54"	Weeping	33.2	Weeping	31.7
			HORIZON C2 SAND & GRAVEL 2.5 Y 6/3 w/Gravel, Cobbles & Boulders	
81"		31.0		30.7
	MOTTLING @ 27" WEEPING @ 54" STANDING WATER - None		MOTTLING @ 18" WEEPING @ 60" STANDING WATER @ 60"	

DEPTH OF REMOVE AND REPLACE

OPERATION & MAINTENANCE PLAN - DETENTION PONDS
SEDIMENT FOREBAY TO BE INSPECTED MONTHLY AND CLEANED FOUR TIMES PER YEAR
DETENTION POND BOTTOM TO BE INSPECTED TWICE PER YEAR
PONDS TO BE CLEANED OF ANY DEBRIS, LEAVES, PINE NEEDLES AND THE LIKE
EXAMINE THE OUTFALL PIPE & SPILLWAY FOR EVIDENCE OF CLOGGING
CLEAN OUTFALL PIPE AND SPILLWAY
REPAIR ANY AREAS OF EROSION AND REVEGETATE
MOW OR CUT ALL VEGETATION ON THE BOTTOM AND SIDESLOPES
ALL SEDIMENT DEPOSIT SHOULD BE DISPOSED OF IN ACCORDANCE WITH ALL FEDERAL, STATE AND LOCAL REGULATIONS

OPERATION & MAINTENANCE PLAN - GRASS SWALES
GRASS SWALES SHALL BE MOWED TO KEEP GRASS HEIGHT NOT SHORTER THAN 3"-4" AND GRASS HEIGHT SHALL NOT EXCEED 6"
CLEAN SWALES OF ANY SEDIMENT, DEBRIS, LEAVES AND THE LIKE
CLEAN PLUNGE POOLS OF ANY SEDIMENT, DEBRIS, LEAVES AND THE LIKE
CLEAN THE LEVEL SPREADER OF ANY SEDIMENT, DEBRIS, LEAVES AND THE LIKE
REPAIR ANY AREAS OF EROSION AND REVEGETATE

OPERATION & MAINTENANCE PLAN - CATCH BASINS & DRAINAGE MANHOLES
CATCH BASINS TO BE INSPECTED AND CLEANED FOUR TIMES PER YEAR OR DEPTH OR WHEN THE DEPTH OF DEPOSIT IS GREATER OR EQUAL TO 1/2 OF THE SUMP
EXAMINE INLET AND OUTLET OF PIPES AND SEPARATOR TEES
CLEAN STRUCTURES OF ANY DEBRIS, LEAVES, PINE NEEDLES & THE LIKE
INSPECT FOR PROPER PIPE OUTFLOW DURING HEAVY STORM EVENT MIN. ONCE/YEAR
ENGAGE A COMPANY TO CLEAN DRAINAGE PIPES AS NECESSARY

OPERATION & MAINTENANCE PLAN - RESPONSIBLE PARTY
ROBERT RODERIQUES, THE APPLICANT AND DEVELOPER WILL BE THE RESPONSIBLE PARTY TO IMPLEMENT THE O & M PLAN UNTIL SUCH TIME AS THE ROADWAYS AND ITS DRAINAGE SYSTEM BECOMES AN ACCEPTED PUBLIC WAY BY A FAIRHAVEN TOWN MEETING VOTE.

DAVID M. DAVIGNON CIVIL NO. 40857 REGISTERED PROFESSIONAL ENGINEER COMMONWEALTH OF MASSACHUSETTS
12-04-19

Rev. #	DATE	BY	DESCRIPTION
4	12-02-19	D.M.D.	PEER REVIEW
3	8-30-19	D.M.D.	PEER REVIEW
2	5-17-19	D.M.D.	DEFINITIVE SUBDIVISION
1	4-11-19	D.M.D.	REVISE GRADING, OMIT WAIVERS

FAIRHAVEN PLANNING BOARD
APPROVED UNDER SUBDIVISION CONTROL LAW

DATE APPROVED: _____

DATE SIGNED: _____

"THE ABOVE ENDORSEMENT IS NOT A DETERMINATION AS TO CONFORMANCE WITH ZONING REGULATIONS OR A DETERMINATION THAT THE LOT IS BUILDABLE."

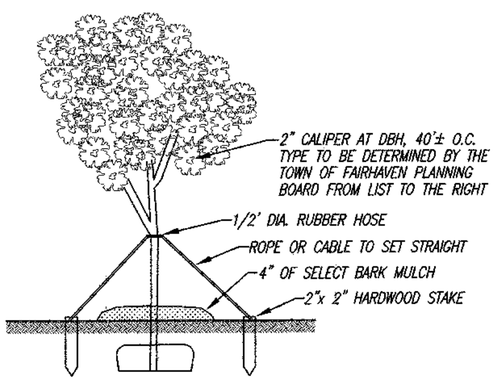

TYP. STREET TREE ANCHOR DETAIL
"Not to Scale"

1. Acer Pseudoplatanus- Sycamore Maple
2. Acer Rubrum spp. -Swamp Maple Hybrids
3. Acer Saccharum- Sugar Maple
4. Carya spp- Hickory
5. Fagus Sylvatica - Beech var.
6. Fraxinius spp. - Ash var.
7. Ginko Biloba -Maidenhair Tree Female Only
8. Gleditsia Tr. Var - Honeylocust var.
9. Juglans spp. - Walnut Tree
10. Larix var - Larch var.
11. Liquidamber Styraciflua -Sweetgum Tree
12. Liriodendron Tulipifera -Tulip Tree
13. Metasequoia Glyptostroboides - Dawn Redwood
14. Nyssa Sylvatica -Tupelo *Wet Conditions Only*
15. Phellodendron Amurense - Cork Tree
16. Platanus Acerifolia - London Plane Tree
17. Quercus spp. - Oak Varities
18. Tilia spp. - Linden *small leaf var. only*
19. Ulmus Americana var. - American Elm *hybrids only*
20. Zelkovia Serrata var. - Japanese Zelkova

C. Prohibited.
1. Weeping Willow
2. All Norway Maples

"DEFINITIVE SUBDIVISION PLAN"
OF DEVELOPMENT TO BE KNOWN AS
"SCONTICUT NECK WOODS"
OFF
HILLER AVENUE and TIMOTHY STREET
IN
FAIRHAVEN, MA
PREPARED FOR
ROBERT RODERIQUES

SHEET 10 OF 11 SHEETS
"CONSTRUCTION DETAILS"

SCALE: VARIES — DATE: NOVEMBER 8, 2018

SCHNEIDER, DAVIGNON & LEONE, INC.
PROFESSIONAL CIVIL ENGINEERS & LAND SURVEYORS
1 COUNTY RD, P.O. BOX 480, MATTAPOISETT, MA 02739
1-508-758-7866

Drawn By: D.M.D. | Check By: N.D.S. | Job No. 3072

FOR REGISTRY USE ONLY

"I CERTIFY THAT THIS PLAN CONFORMS WITH THE RULES AND REGULATIONS OF THE REGISTERS OF DEEDS."

PREPARER

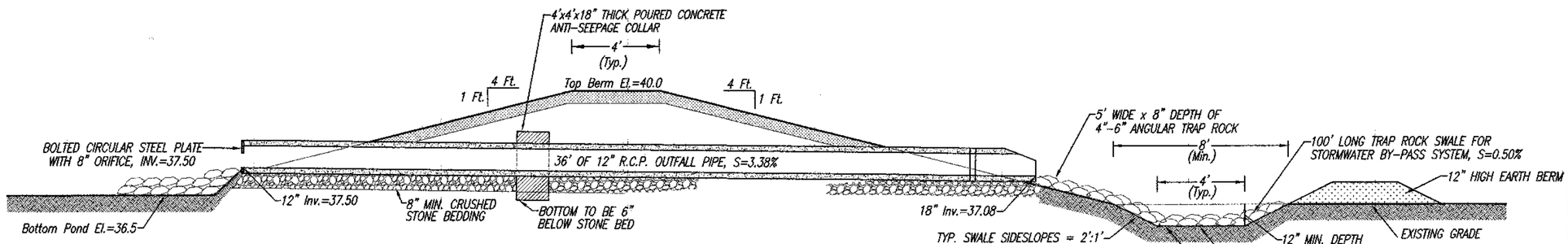

DETENTION POND A - OUTFALL DETAIL
NOT TO SCALE

BY-PASS TRAP ROCK SWALE
NOT TO SCALE

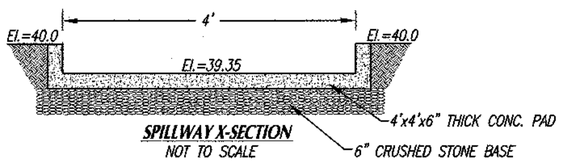

SPILLWAY X-SECTION
NOT TO SCALE

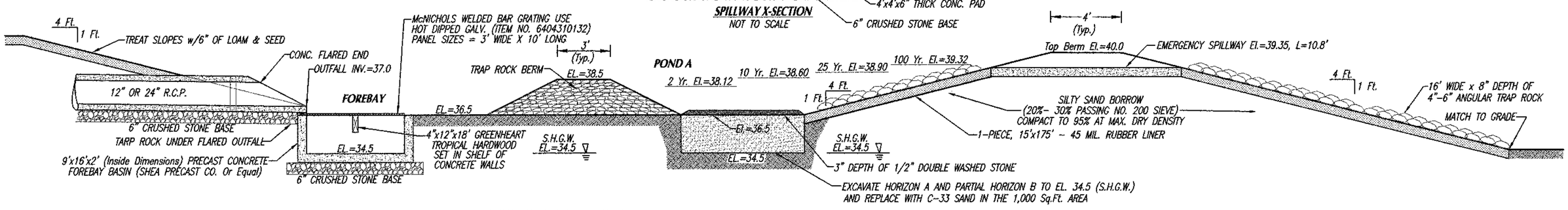

X-SECTION DETENTION POND A
NOT TO SCALE

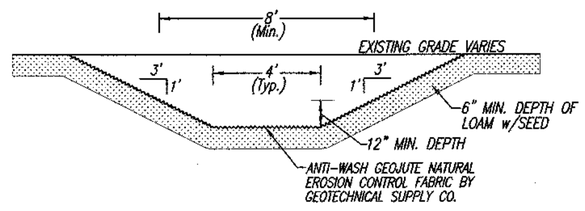

TYP. X-SECTION OF GRASS DRAINAGE ALONG P-LINES OF LOTS #1 - #4
NOT TO SCALE

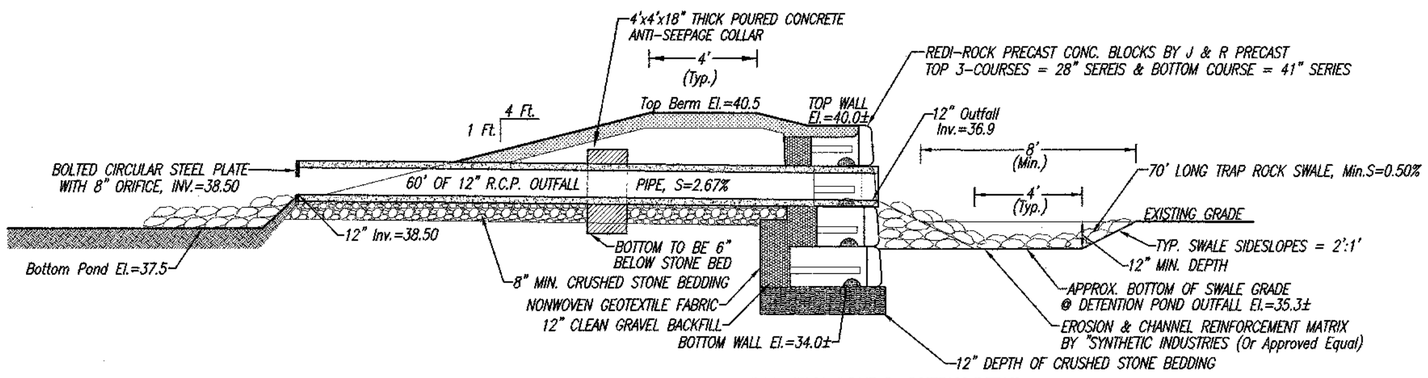

DETENTION POND B - OUTFALL DETAIL
NOT TO SCALE

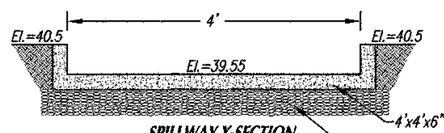

SPILLWAY X-SECTION
NOT TO SCALE

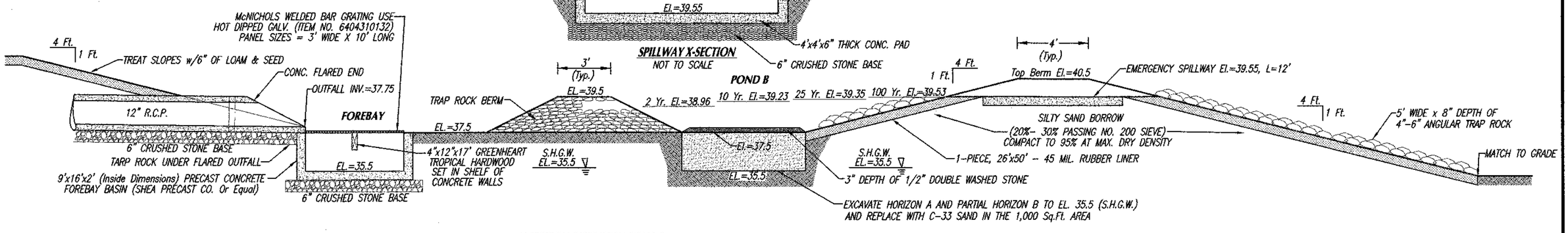

X-SECTION DETENTION POND B
NOT TO SCALE

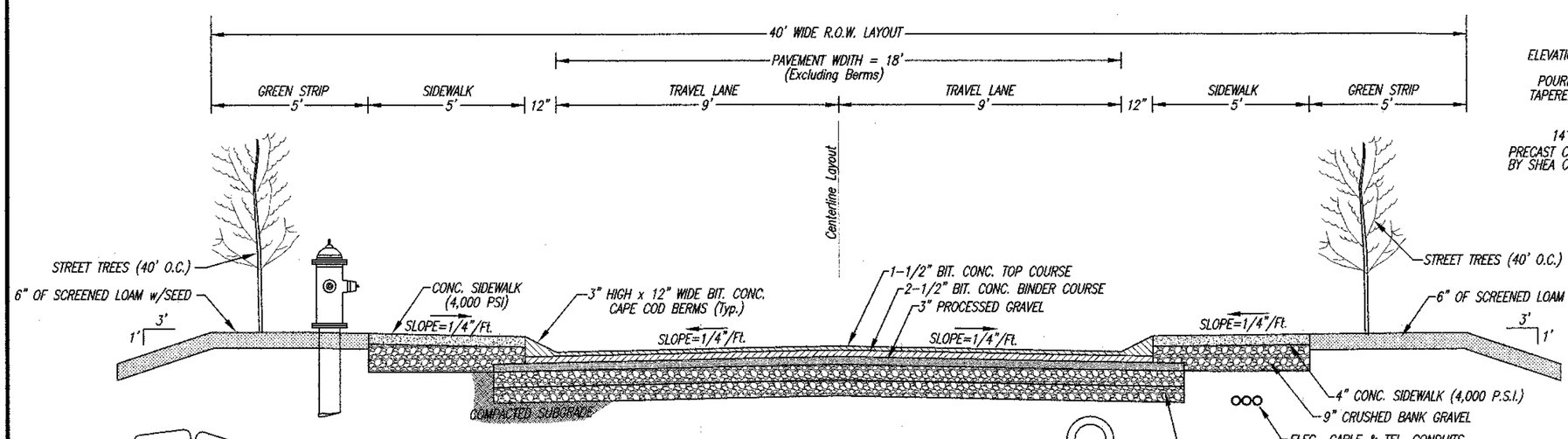

SOUTHERLY ROADWAY TYP. ROADWAY X-SECTION
NOT TO SCALE

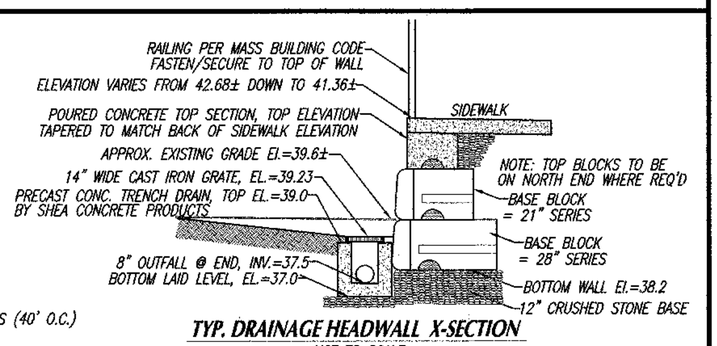

TYP. DRAINAGE HEADWALL X-SECTION
NOT TO SCALE

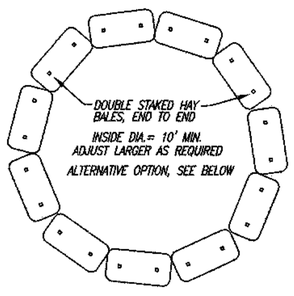

ALTERNATIVE OPTION; USE THE "DIRT BAG" PUMPED SILT CONTROL SYSTEM BY "ACF" DISTRIBUTOR: A.H. HARRIS & SONS, INC.

TYP. DEWATERING HAY BALE RING
"Not to Scale"

ROADWAY CONSTRUCTION NOTES:

1.) ALL CONSTRUCTION METHODS AND MATERIALS SHALL CONFORM TO MASSACHUSETTS HIGHWAY DEPARTMENT STANDARD MDPW M103.0, TYPE A SPECIFICATIONS AND ANY APPLICABLE TOWN OF FAIRHAVEN BOARD OF PUBLIC WORKS SPECIFICATIONS AND PLANNING BOARD RULES AND REGULATIONS.
2.) ALL BASE FILL MATERIAL WITHIN ROADWAY BED SHALL BE SELECT GRAVEL WITH A 3" MAXIMUM STONE SIZE.
3.) GRAVEL TO BE SPREAD IN 6" LIFTS, THOROUGHLY WATERED AND ROLLED TRUE TO LINE & GRADE w/A 12 TON ROLLER.
4.) WATER AND SEWER UTILITIES INSTALLATION SHALL CONFORM TO FAIRHAVEN BOARD OF PUBLIC WORKS REQUIREMENTS.

DAVID M. DAVIGNON CIVIL NO. 48857 REGISTERED PROFESSIONAL ENGINEER
12-04-19

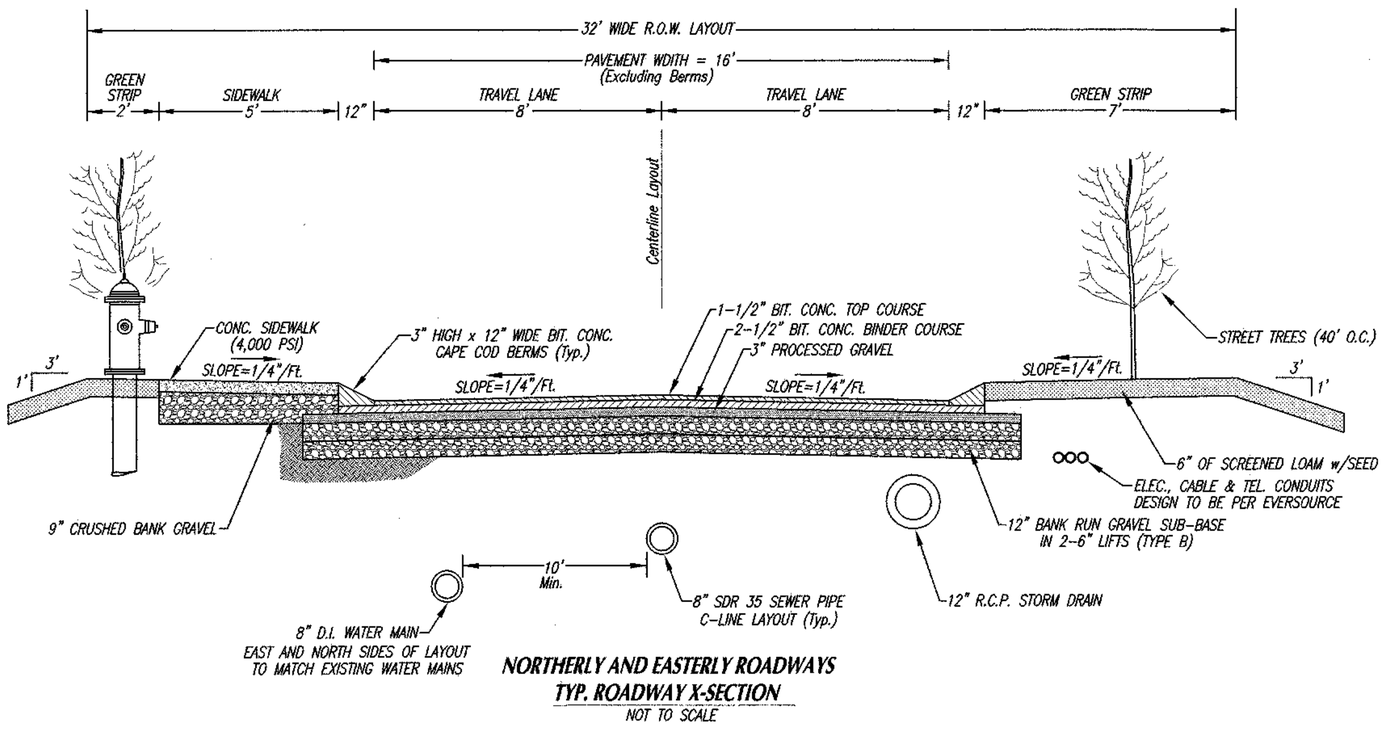

NORTHERLY AND EASTERLY ROADWAYS TYP. ROADWAY X-SECTION
NOT TO SCALE

Rev. #	DATE	BY	DESCRIPTION
4	12-02-19	D.M.D.	PEER REVIEW
3	8-30-19	D.M.D.	PEER REVIEW
2	5-17-19	D.M.D.	DEFINITIVE SUBDIVISION
1	4-11-19	D.M.D.	REVISE GRADING, OMIT WAIVERS

FAIRHAVEN PLANNING BOARD
APPROVED UNDER SUBDIVISION CONTROL LAW

DATE APPROVED: _____

DATE SIGNED: _____

"THE ABOVE ENDORSEMENT IS NOT A DETERMINATIION AS TO CONFORMANCE WITH ZONING REGULATIONS OR A DETERMINATION THAT THE LOT IS BUILDABLE."

"DEFINITIVE SUBDIVISION PLAN"
OF DEVELOPMENT TO BE KNOWN AS
"SCONTICUT NECK WOODS"
OFF
HILLER AVENUE and TIMOTHY STREET
IN
FAIRHAVEN, MA
PREPARED FOR
ROBERT RODERIQUES

SHEET 11 OF 11 SHEETS
"CONSTRUCTION DETAILS"

SCALE: VARIES — DATE: NOVEMBER 8, 2018

SCHNEIDER, DAVIGNON & LEONE, INC.
PROFESSIONAL CIVIL ENGINEERS & LAND SURVEYORS
1 COUNTY RD, P.O. BOX 480, MATTAPOISETT, MA 02739
1-508-758-7866

Drawn By: D.M.D. | Check By: N.D.S. | Job No. 3072