GENERAL NOTES:

1. LOCUS PROPERTY IS COMPRISED OF:
   ASSESSOR'S MAP 34A LOT 21
   DEED BOOK: 15054 / PAGE: 93
   OWNER OF RECORD: MAIN ST. DEVELOPMENT, LLC.
   430 NEW PARK AVENUE, SUITE 102
   HARTFORD, CT 06106

2. PLAN REFERENCES:
   WASHINGTON STREET (ROUTE 6) SEWER PLAN DATED MARCH 1987 BY FAY, SPOFFORD & THORNDIKE, INC. ENGINEERS.
   PLAN BOOK 106 PAGE 25

3. PROJECT BENCHMARKS:
   BENCHMARK A – CONCRETE BOUND – ELEVATION = 70.02'
   BENCHMARK B – IRON ROD W/CAP – ELEVATION = 70.96'
   (DATUM: NAVD88)

4. ZONING INFORMATION ZONING DISTRICT: SINGLE RESIDENCE DISTRICTS (RA)
   MINIMUM / MAXIMUM ZONING REQUIREMENTS
   MIN. LOT AREA = 15,000 SF
   MIN. LOT FRONTAGE = 100'
   MIN. BUILDING SETBACKS: FRONT = 20' SIDE = 10' REAR = 30'
   MAX. BUILDING HEIGHT = 35'
   MAX. BUILDING COVERAGE % = 30%
   MAX. IMPERVIOUS AREA % = 50%

5. THE PROPERTY LINE INFORMATION SHOWN IS BASED ON CURRENT AVAILABLE RECORD INFORMATION CONSISTING OF PLANS AND DEEDS AND AN ACTUAL ON THE GROUND FIELD SURVEY PERFORMED BY RIM ENGINEERING CO., INC., ON JUNE 1, 2025.

6. COMMUNITY PANEL NUMBER: 25005C0413G (DATE: 7/6/2021) THE FLOOD INSURANCE RATE MAP DEFINES THIS AREA AS ZONE "X", AREA OF MINIMAL FLOOD HAZARD.

7. WETLAND RESOURCE AREA DELINEATION WAS PERFORMED BY ENVIRONMENTAL CONSULTING AND RESTORATION, LLC. (ECR) ON MAY 8, 2025 AND SURVEY LOCATED BY RIM ENGINEERING CO., INC.

8. UTILITY INFORMATION SHOWN HEREON: THE CONTRACTOR SHALL CONTACT DIG SAFE (AT 1-888-DIG-SAFE) AND UTILITY COMPANIES TO LOCATE ALL EXISTING UTILITIES, AT LEAST 72 HOURS PRIOR TO THE START OF CONSTRUCTION. LOCATION OF EXISTING UNDERGROUND INFRASTRUCTURE, UTILITIES, CONDUITS AND LINES ARE SHOWN IN AN APPROXIMATE WAY ONLY, MAY NOT BE LIMITED TO THOSE SHOWN HEREON, AND HAVE BEEN RESEARCHED BASED ON THE AVAILABLE UTILITY RECORDS NOTED HEREON. THE CONTRACTOR AGREES TO BE FULLY RESPONSIBLE FOR ANY AND ALL DAMAGES WHICH MIGHT BE OCCASIONED BY THE CONTRACTOR'S FAILURE TO LOCATE SAID INFRASTRUCTURE AND UTILITIES EXACTLY. IF FIELD CONDITIONS DIFFER FROM PLAN INFORMATION, THE CONTRACTOR SHALL NOTIFY THE ENGINEER IMMEDIATELY FOR POSSIBLE REDESIGN.

9. THIS DESIGN IS BASED ON THE FIELD WORK PERFORMED BY CRAIG CYGAWNOSKI, RLS OF RIM ENGINEERING CO., INC. THE CIVIL ENGINEER CERTIFYING THIS PLAN HAS NOT MADE ANY PROPERTY LINE DETERMINATIONS IN THE DEVELOPMENT OF THIS DESIGN AND IS RELYING ON THE EXISTING CONDITIONS AND PROPERTY LINE INFORMATION AS DETERMINED AND PROVIDED BY CRAIG CYGAWNOSKI, RLS OF RIM ENGINEERING CO., INC.

10. MEAN ANNUAL HIGH WATER (MAHW) FLAGS DELINEATED BY ECR DURING A SITE WALK ON SEPTEMBER 26, 2025 WITH THE CONSERVATION AGENT.

UTILITY NOTES:

1. 12" MINIMUM VERTICAL CLEARANCE SHALL BE MAINTAINED BETWEEN ALL UTILITY CROSSINGS.

2. A MINIMUM 10' HORIZONTAL SEPARATION SHALL BE MAINTAINED BETWEEN WATER AND SEWER LINES. WHERE WATER LINES CROSS SEWER LINES, THE SEWER LINE SHALL BE LOCATED WITH A MINIMUM VERTICAL CLEARANCE OF 18" BELOW THE WATER LINE. THE SEWER LINE JOINTS SHALL BE LOCATED EQUIDISTANT AND AS FAR AWAY FROM THE WATER LINE AS POSSIBLE. WHEN IT IS IMPOSSIBLE TO ACHIEVE HORIZONTAL AND/OR VERTICAL SEPARATION AS STIPULATED ABOVE, BOTH THE WATER LINE AND SEWER LINE AT THE CROSSING LOCATION SHALL BE CONSTRUCTED OF MECHANICAL JOINT CEMENT-LINED DUCTILE IRON PIPE FOR ONE FULL 20' PIPE LENGTH OR ANOTHER EQUIVALENT THAT IS WATERTIGHT AND STRUCTURALLY SOUND. THE JOINTS FOR BOTH PIPES SHALL BE LOCATED AS FAR AWAY FROM THE CROSSING AS POSSIBLE. BOTH PIPES SHOULD BE PRESSURE TESTED TO 150 PSI TO ENSURE THAT THEY ARE WATERTIGHT.

3. SEWER BUILDING CONNECTIONS SHALL BE 6" MIN. SCH. 40 PVC, UNLESS OTHERWISE NOTED, AT A SLOPE OF 2% MINIMUM FROM MAINLINE TO BUILDING UNIT WITH A CLEAN OUT SET AT A DISTANCE OF 10' (UNLESS OTHERWISE NOTED) OFF BUILDING FOUNDATION.

4. TYPICAL COVER OVER WATER LINE SHALL BE 5'. IF LESS THAN 4' OF COVER IS PROVIDED, INSULATE WATER LINE AGAINST FREEZING.

5. GAS, ELECTRIC, DATA/COM IS SHOWN SCHEMATICALLY HEREON. THESE UTILITIES SHALL BE INSTALLED WITH A MINIMUM COVER OF 3 FEET UNLESS OTHERWISE NOTED OR OTHERWISE DIRECTED BY THE CONTROLLING UTILITY COMPANY. CONTRACTOR SHALL COORDINATE FINAL LAYOUT WITH APPLICABLE UTILITY COMPANY.

6. ALL UTILITY CUTS THROUGH EXISTING CONCRETE OR BITUMINOUS CONCRETE PAVED SURFACES SHALL BE SAW CUT. BACK FILLING OF TRENCH SHALL INCLUDE 12" IN DEPTH FLOWABLE FILL TO BE THE BASE COURSE OF THE SURFACE TREATMENT. THE SURFACE TREATMENT SHALL THEN BE REPLACED IN KIND. IF THE BITUMINOUS CONCRETE SURFACE IS WITHIN THE ROADWAY THE BITUMINOUS CONCRETE TOP COURSE SHALL BE FINISHED WITH INFRARED TREATMENT TO BLEND EXISTING & NEWLY PAVED SURFACES.

CONSERVATION COMMISSION NOTES:

PROPOSED LOT COVERAGE = 2,640 SF (17.1% OF LOT)

PROPOSED BUILDING LOT COVERAGE = 1,800 SF (11.7% OF LOT)

LOT AREA IN 100' BUFFERZONE/BVW = 13,376 SF (86.6% OF LOT)

LIMIT OF WORK IN 25' BUFFERZONE/BVW = 0 SF

LIMIT OF WORK IN 25-50' BUFFERZONE/BVW = 1,578 SF

LIMIT OF WORK IN 50-100' BUFFERZONE/BVW = 5,496 SF

TOTAL LIMIT OF WORK IN 100' BUFFERZONE/BVW = 7,074 SF (52.8% OF LOT AREA WITHIN 100' BUFFERZONE/BVW)

LOT AREA IN 50-100' BUFFERZONE/BVW = 5,828 SF

IMPERVIOUS AREA IN 50-100' BUFFERZONE/BVW = 2,271 SF (17.0% OF 50-100' BUFFERZONE/BVW)

INVASIVE SPECIES LOCATED WITHIN THE PROPOSED LIMIT OF WORK SHALL BE PROPERLY REMOVED AND DISPOSED OF PRIOR TO SITE CONSTRUCTION.

GRADING NOTES:

1. THE PROJECT ELEVATIONS ARE BASED ON THE NAVD88 VERTICAL DATUM.

2. DEMOLITION DEBRIS, EXCESS AND UNSUITABLE MATERIALS FROM THE DEMOLITION OPERATION SHALL BE REMOVED FROM THE SITE AND DISPOSED OF IN A LEGAL MANNER BY THE CONTRACTOR.

3. DISTURBED AREAS SHALL BE PROTECTED AT ALL TIMES TO CONTROL SEDIMENT TRANSPORT BEYOND THE LIMIT OF WORK.

4. DISTURBED AREAS SHALL BE TREATED WITH WATER DURING EXCAVATION, OR APPROVED ALTERNATIVE, FOR DUST CONTROL.

5. ALL DISTURBED AREAS NOT OTHERWISE TREATED SHALL BE STABILIZED WITH 4" LOAM, SEED, & MULCH. THE CONTRACTOR SHALL BE RESPONSIBLE FOR AREAS UNTIL VEGETATION HAS BEEN PERMANENTLY ESTABLISHED. SLOPES IN EXCESS OF 3:1 SHALL BE FURTHER STABILIZED WITH EROSION CONTROL BLANKETS (ECB) OF CURLEX OR EQUAL.

SEDIMENTATION CONTROL NOTES:

1. MAINTAIN A STOCKPILE OF 50 STRAW BALES, 100 FEET OF SILT FENCE AND 3 CUBIC YARDS OF RIP-RAP ON SITE AT ALL TIMES UNTIL A PERMANENT GROUND COVER HAS BEEN ESTABLISHED.

2. STUMPS FROM THE CLEARING OPERATION SHALL BE REMOVED FROM SITE AND DISPOSED OF IN A LEGAL MANNER.

3. DISTURBED AREAS SHALL BE PROTECTED AT ALL TIMES TO CONTROL SEDIMENT TRANSPORT BEYOND THE LIMIT OF WORK.

4. DISTURBED AREAS SHALL BE TREATED WITH WATER DURING EXCAVATION, OR APPROVED ALTERNATIVE, FOR DUST CONTROL.

5. ROADWAY MUST BE KEPT CLEAR OF DEMOLITION AND CONSTRUCTION MATERIALS. ANY DUST OR DEBRIS MUST BE SWEPT OFF THE ROADWAY AT THE END OF EACH WORKING DAY TO PREVENT SEDIMENTATION INTO THE ROADWAY DRAINAGE SYSTEM AND NEARBY WETLAND RESOURCE AREAS.

FAIRHAVEN

CONSERVATION COLOR CHART
EDGE OF WETLAND/BVW
EDGE OF WATER/MAHW
25' "NO DISTURB" BUFFERZONE/BVW
50' BUFFERZONE/BVW
100' BUFFERZONE/BVW
100' BUFFERZONE/MAHW
SEDIMENT CONTROL BARRIER

LAND SURVEYING CONSULTANT:

RIM ENGINEERING CO., INC.
P.O. BOX 32 MANSFIELD, MA. 02048
(508) 339-3731 RIMENGINEERING@VERIZON.NET

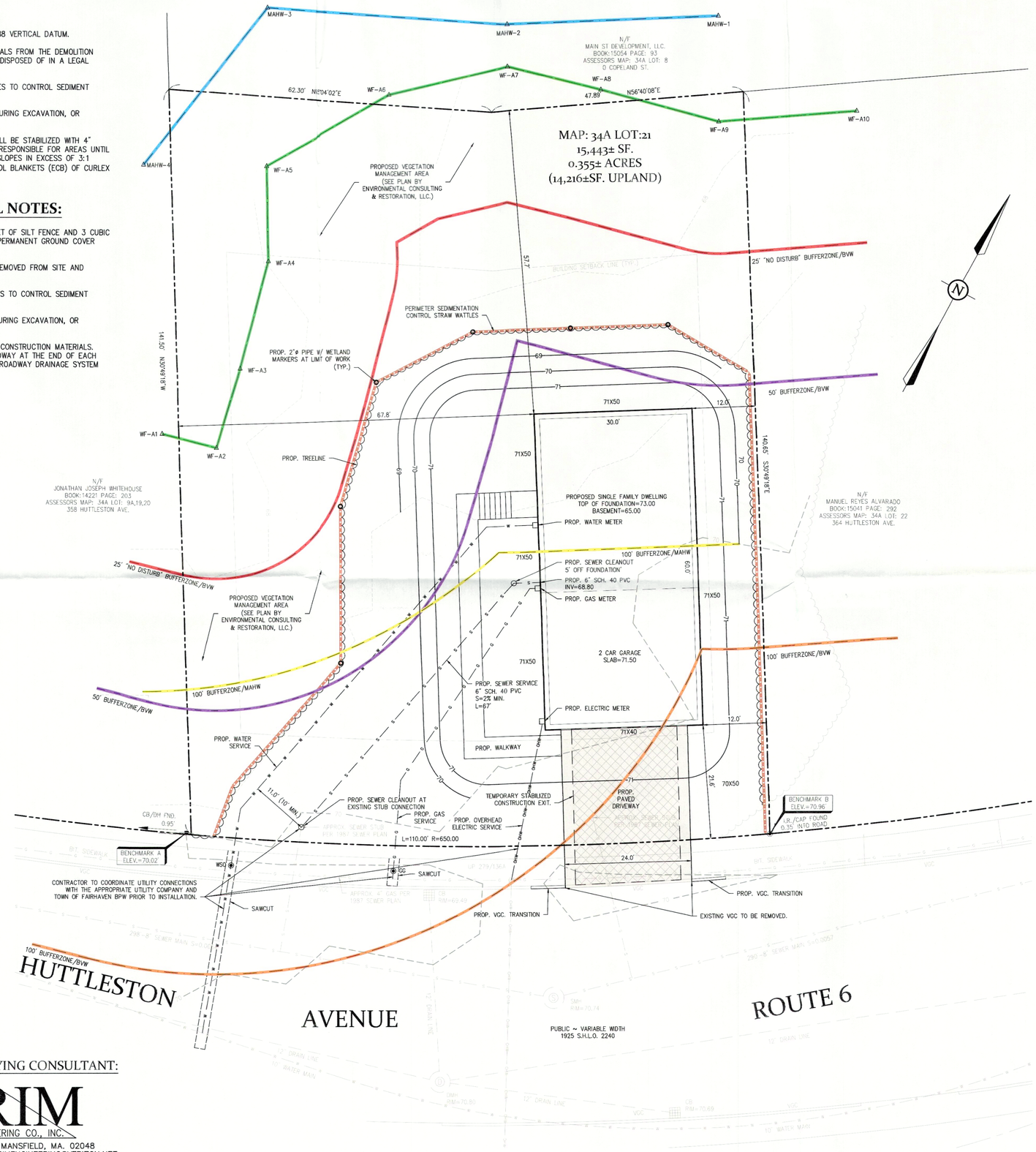

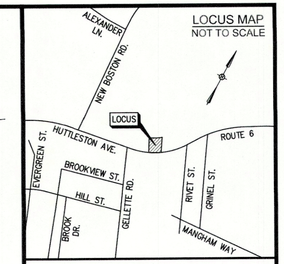

PERMITTING SET

REVISIONS

No.	DATE	DESCRIPTION
1	8/13/2025	PER CONSERVATION COMMENTS
2	11/13/2025	PER CONSERVATION COMMENTS

DRAWN BY:	JVW
CHECKED BY:	GWD/CEC
DESIGNED BY:	GWD/JVW

NOTICE OF INTENT & BUILDING PERMIT PLOT PLAN

0 HUTTLESTON AVENUE
IN
FAIRHAVEN
(BRISTOL COUNTY)
MASSACHUSETTS

JULY 3, 2025

PREPARED FOR:

LINO TEIXEIRA
22 GLENWOOD STREET
BROCKTON
MASSACHUSETTS 02301

0 10' 20'
SCALE: 1" = 10'

JDE CIVIL
45 Bristol Drive, Suite 205
South Easton, MA 02375
Phone: 508-297-9999
www.JDECivil.com

COMMONWEALTH OF MASSACHUSETTS
GREGORY W. DRISCOLL JR
CIVIL
NO 49073
REGISTERED PROFESSIONAL ENGINEER

COMMONWEALTH OF MASSACHUSETTS
CRAIG E. CYGAWNOSKI
No 11456
PROFESSIONAL LAND SURVEYOR

SHEET 1 OF 2

JOB NUMBER: 25-023

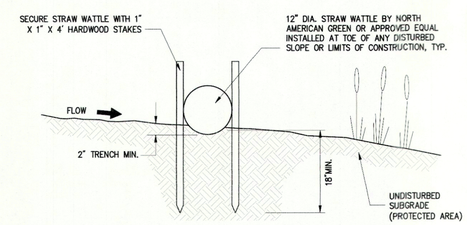

NOTES:

1. PRIOR TO INSTALLATION, CLEAR ALL OBSTRUCTIONS INCLUDING ROCKS, CLODS, AND DEBRIS GREATER THAN ONE INCH THAT MAY INTERFERE WITH PROPER FUNCTION OF STRAW WATTLE.
2. INSTALL STRAW WATTLES PERPENDICULAR TO THE FLOW DIRECTION AND PARALLEL TO THE SLOPE WITH THE BEGINNING AND END OF THE INSTALLATION POINTING SLIGHTLY UP THE SLOPE CREATING A "J" SHAPE AT EACH END TO PREVENT BYPASS. EXCAVATE A 4" DEEP X 9" WIDE TRENCH, EXCAVATED SOIL SHOULD BE PLACED UP-SLOPE FROM THE ANCHOR TRENCH.
3. PLACE THE WATTLE IN THE TRENCH SO THAT IT CONTOURS TO THE SOIL SURFACE. COMPACT SOIL FROM THE EXCAVATED TRENCH AGAINST THE WATTLE ON THE UPHILL SIDE. ADJACENT WATTLES SHOULD TIGHTLY ABUT OR OVERLAP.
4. SECURE WATTLES WITH 1"x1"x24" STAKES EVERY 3'-4' AND WITH STAKES AT EACH END. STAKES SHOULD BE DRIVEN ON EITHER SIDE OF THE WATTLE. STAKES SHOULD BE DRIVEN PERPENDICULAR TO SLOPE FACE.
5. STRAW WATTLE TO BE 12" DIA. MANUFACTURED BY NORTH AMERICAN GREEN OR APPROVED EQUAL.
6. SEDIMENT CONTROL MEASURES SHALL FOLLOW THE PERFORMANCE STANDARDS OF THE USDA SOIL CONSERVATION SERVICE, AND ANY APPLICABLE STATE/LOCAL CONSERVATION AUTHORITY.

DETAIL # 519 **STRAW WATTLE SEDIMENTATION CONTROL** JDE

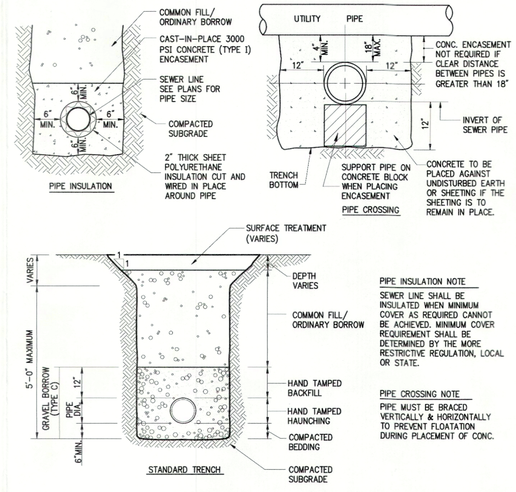

PIPE INSULATION NOTE

SEWER LINE SHALL BE INSULATED WHEN MINIMUM COVER AS REQUIRED CANNOT BE ACHIEVED. MINIMUM COVER REQUIREMENT SHALL BE DETERMINED BY THE MORE RESTRICTIVE REGULATION, LOCAL OR STATE.

PIPE CROSSING NOTE

PIPE MUST BE BRACED VERTICALLY & HORIZONTALLY TO PREVENT FLOATATION DURING PLACEMENT OF CONC.

DETAIL #018 **UTILITY TRENCH** JDE

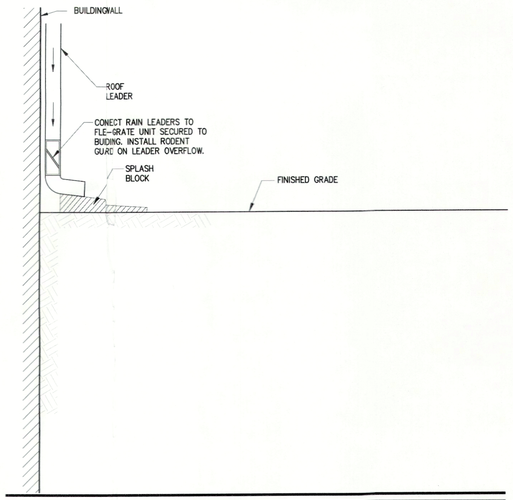

DETAIL # 172 **ROOF DRAIN** JDE

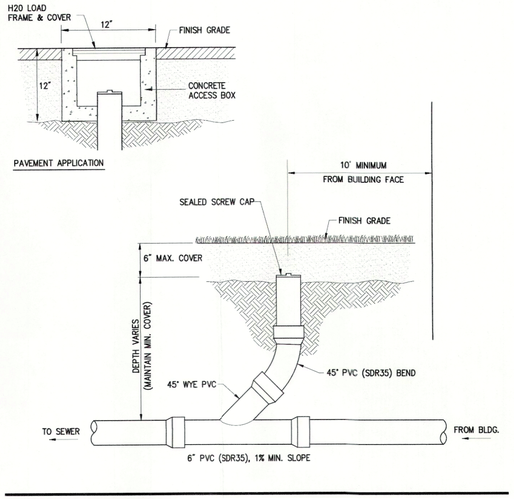

DETAIL # 204 **SEWER SERVICE CLEAN-OUT (CO)** JDE

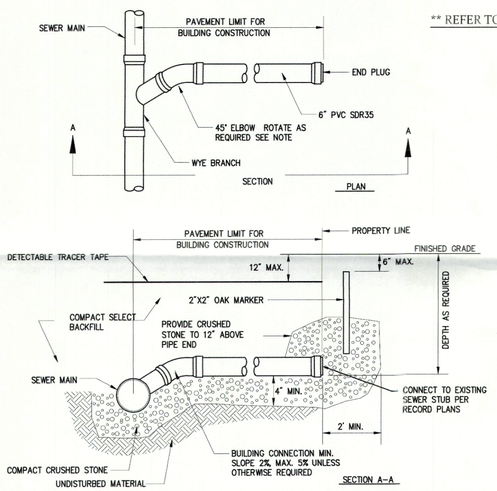

DETAIL # 218 **SEWER LINE CONNECTION** JDE

** REFER TO TOWN OF FAIRHAVEN WATER DIVISION, BPW NOTES FOR SPEC. **

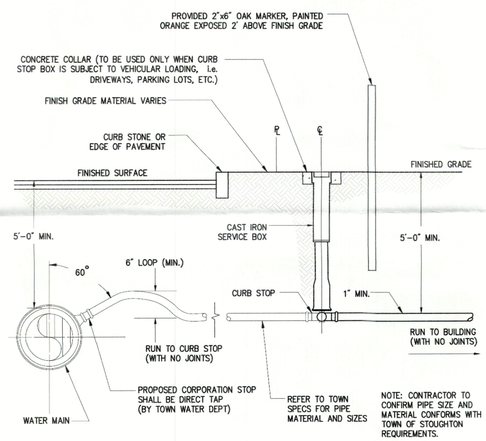

NOTE: CONTRACTOR TO CONFIRM PIPE SIZE AND MATERIAL CONFORMS WITH TOWN OF STOUGHTON REQUIREMENTS.

DETAIL # 304 **WATER SERVICE CONNECTION** JDE

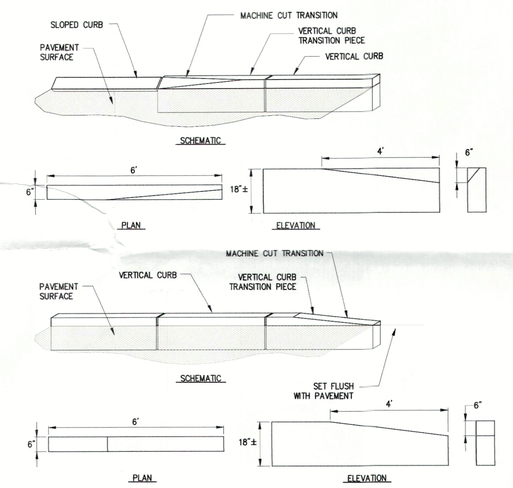

DETAIL # 414 **TRANSITIONAL CURB TYPES** JDE

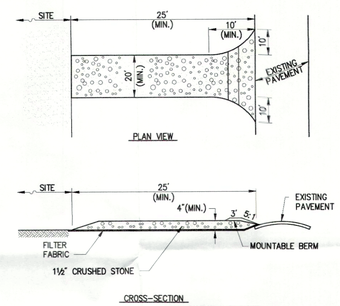

NOTES:

1. ENTRANCE WIDTH SHALL BE A TWENTY (20) FOOT MINIMUM, BUT NOT LESS THAN THE FULL WIDTH AT POINTS WHERE INGRESS OR EGRESS OCCURS.
2. THE ENTRANCE SHALL BE MAINTAINED IN A CONDITION WHICH SHALL PREVENT TRACKING OR FLOWING OF SEDIMENT ONTO PUBLIC RIGHTS-OF-WAY. THIS MAY REQUIRE PERIODIC TOP DRESSING WITH ADDITIONAL STONE AS CONDITIONS DEMAND AND REPAIR OR CLEANOUT OF ANY MEASURES USED TO TRAP SEDIMENT. ALL SEDIMENT SPILLED, DROPPED, WASHED OR TRACKED ONTO PUBLIC RIGHTS-OF-WAY MUST BE REMOVED IMMEDIATELY. BERM SHALL BE PERMITTED. PERIODIC INSPECTION AND MAINTENANCE SHALL BE PROVIDED AS NEEDED.
3. CURTIS AVE. ROADWAY MUST BE KEPT CLEAR OF DEMOLITION AND CONSTRUCTION MATERIALS. ANY DUST OR DEBRIS MUST BE SWEPT OFF THE ROADWAY AT THE END OF EACH WORKING DAY TO PREVENT SEDIMENTATION INTO THE ROADWAY DRAINAGE SYSTEM AND NEARBY WETLAND RESOURCE AREAS.

DETAIL # 509 **STABILIZED CONSTRUCTION EXIT** JDE

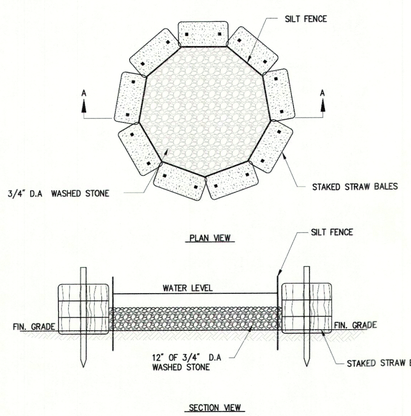

DETAIL # 518 **DE-WATERING SEDIMENT BASIN** JDE

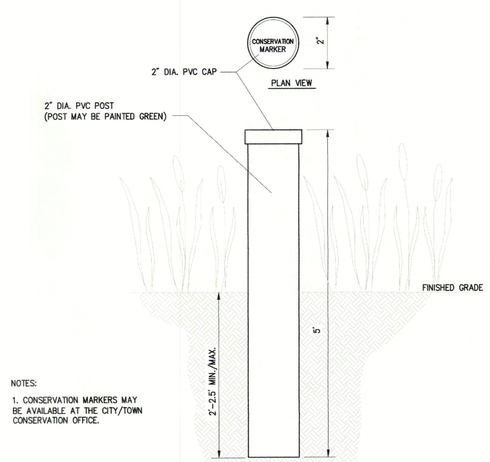

NOTES:

1. CONSERVATION MARKERS MAY BE AVAILABLE AT THE CITY/TOWN CONSERVATION OFFICE.

DETAIL # 019 **CONSERVATION MARKER** JDE

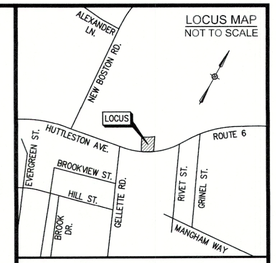

PERMITTING SET

REVISIONS

No.	DATE	DESCRIPTION
1	8/13/2025	PER CONSERVATION COMMENTS
2	11/13/2025	PER CONSERVATION COMMENTS

DRAWN BY:	JVW
CHECKED BY:	GWD/CEC
DESIGNED BY:	GWD/JVW

CONSTRUCTION DETAILS

0 HUTTLESTON AVENUE
IN
FAIRHAVEN
(BRISTOL COUNTY)
MASSACHUSETTS

JULY 3, 2025

PREPARED FOR:

LINO TEIXEIRA
22 GLENWOOD STREET
BROCKTON
MASSACHUSETTS 02301

JDE CIVIL
45 Bristol Drive, Suite 205
South Easton, MA 02375
Phone: 508-297-9999
www.JDECivil.com

COMMONWEALTH OF MASSACHUSETTS
GREGORY W. DIRISCOLL JR.
CIVIL
NO. 48573
REGISTERED PROFESSIONAL ENGINEER

SHEET 2 OF 2

JOB NUMBER: 25-023